SVF Flow Controls
INCORPORATED

Series L8
Instrument Valve

The SVF Series L8 ball valves are compression-ended valves that are designed to be compatible with all of the leading instrument fittings. This high performance valve has all of the key features of our process-quality design including a vast selection of seats & seals and integral ISO mounting pad.

Features 1/4 - 1"

- ▲ Live-loaded stem seal per ISA-SP-93
- ▲ Self-relieving seats that reduce operating torque and improve seat life
- ▲ Integral ISO mounting pad to ISO-5211
- ▲ Stainless steel ends are 316L grade
- ▲ Blowout-proof stem
- ▲ Stainless externals - hardware, stem and handle
- ▲ Encapsulated body seals
- ▲ Full range of versatile options
- ▲ Available with or without compression fittings

Materials

Item	Description	Material
1	Body	316 SS
2	Body Connector	316 SS
3	Ball	316 SS
4	Stem	17-4 Stainless
5	Seat	PTFE, RTFE, NGR, Delrin, UHMWPE, PEEK, VXI
6	Body Connector Seal	PTFE, Buna-N, Graphoil, UHMWPE

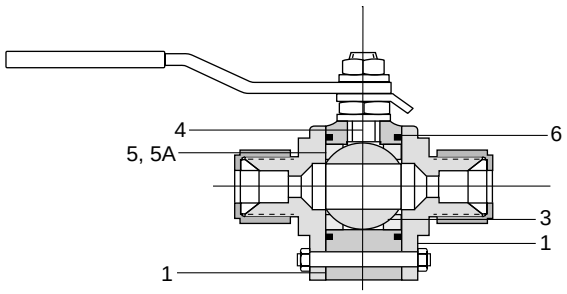

Dimensions & Weights (ins., lbs)

Size	A	B	C	D	Wt.
1/4”	3.03	2.40	4.49	1.81	1.70
3/8”	3.11	2.40	4.49	1.81	1.70
1/2”	3.35	2.40	4.49	1.81	1.70
3/4”	3.74	2.60	4.49	1.81	2.00
1”	4.53	3.42	5.75	2.40	3.70

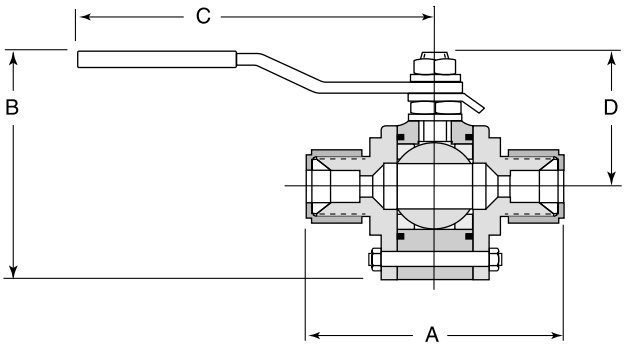

13560 Larwin Circle Santa Fe Springs, CA 90670 800.783.7836 fax 562.802.3114
Sales@SVF.net www.SVF.net

Specifications subject to change without notice. 2002 SVF Flow Controls Incorporated. Printed In USA.