Gate Valves- Extended Body- Reduced Port- Integral Reinforced - Valvolet® End & Lip End Welded & Bolted Bonnet

BONNEY FORGE

800 Lb.
1500 Lb.

Design construction:
API 602 - ASME B16.34
Testing according to API 598
Marking MSS-SP-25
Integral extended body
Outside Screw and Yoke (OS&Y)
Self aligning two piece packing gland
Spiral-wound gasket
Body-bonnet weld to ASME IX
Integral backseat
Socket Weld Ends to ASME B16.11
Screwed Ends (NPT) to ASME B1.20.1
Butt Welding Ends to ASME B16.25
Rating:
-carbon steel class 800 1975 psig @ 100°F
138 bar + 38°C
-carbon steel class 1500 3705 psig @ 100°F
255 bar + 38°C

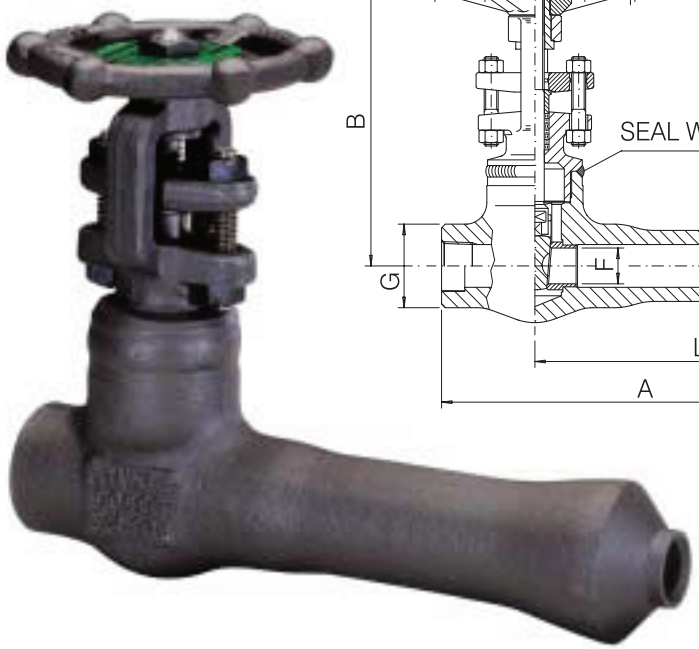

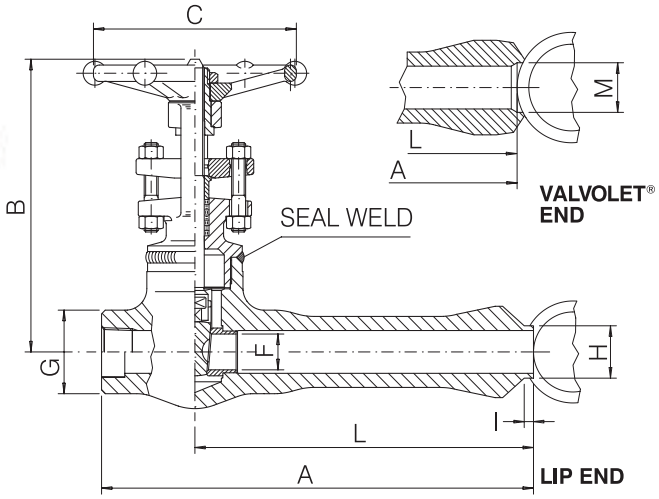

800 LB.

BOLTED BONNET – FIG. VLL 10 / WELDED BONNET – FIG. VOLL 10						
SIZE	inch mm	1/2 15	3/4 20	1 25	1 1/2 40	2 50
A	inch mm	8.15 207	8.60 218,5	9.62 244,5	10.37 263,5	10.53 267,5
B open	inch mm	5.98 152	6.22 158	7.72 196	10.04 255	11.42 290
C	inch mm	3.46 88	3.46 88	3.82 97	5.43 138	5.43 138
F	inch mm	.38 9,6	.55 14	.71 18	1.18 30	1.44 36,6
G	inch mm	1.26 32	1.50 38	1.89 48	2.52 64	3.07 78
H	inch mm	.69 17,5	.87 22	1.12 28,5	1.61 41	1.81 46
I	inch mm	.16 4	.19 4,8	.19 4,8	.25 6,3	.31 8
L	inch mm	6.57 167	6.81 173	7.48 190	7.87 200	8.03 204
M	inch mm	.87 22	1.18 30	1.44 36,5	1.99 50,5	2.56 65
Weight Bolted B.	lb. kg	5.75 2,6	6.75 3,1	11.25 5,1	21 9,5	28.5 13
Weight Welded B.	lb. kg	5 2,3	6.25 2,9	9.5 4,3	19.5 8,8	25.75 11,7
PACKING		BH2	BH2	BH4	BH6	BY5
GASKET*		G2	G2	G3	G6	G7

1500 LB.

BOLTED BONNET – FIG. 9VLL 10 / WELDED BONNET – FIG. 9VOLL 10					
SIZE	inch mm	1/2 15	3/4 20	1 25	1 1/2 40
A	inch mm	8.60 218,5	9.62 244,5	10.37 263,5	10.53 267,5
B open	inch mm	6.02 153	7.48 190	8.66 220	11.10 282
C	inch mm	3.46 88	3.82 97	5.43 138	5.43 138
F	inch mm	.38 9,6	.55 14	.71 18	1.18 30
G	inch mm	1.50 38	1.89 48	2.20 56	3.07 78
H	inch mm	.69 17,5	.87 22	1.12 28,5	1.61 41
I	inch mm	.16 4	.19 4,8	.19 4,8	.25 6,3
L	inch mm	6.81 173	7.48 190	7.87 200	8.03 204
M	inch mm	1.18 30	1.44 36,5	1.99 50,5	2.56 65
Weight Bolted B.	lb. kg	8 3,6	12.25 5,6	23 10,5	32 14,5
Weight Welded B.	lb. kg	6.25 2,9	10.25 4,7	19.75 9	27.5 12,5
PACKING		BH3	BH5	BH6	2B5
GASKET*		G1	G2	G3	G5

Materials and trim specifications Page 91
Valvolet® run pipe consolidation sizes Page 93

* Only for Bolted Bonnet type.