GREAT LAKES

Heavy duty, light weight, low profile, roll off container pup trailers

8450 County "R" Suring, Wisconsin 54174 • 920.842.2012

MODEL SR 2440
Up to 24' Containers with 40,000 GVWR

MODEL TR 2450
Up to 24' Containers with 50,000 GVWR

Double your payload without doubling your labor or equipment cost.

Trucks with cable or hook lift systems can easily transfer containers on and off the rear of the trailer in minutes.

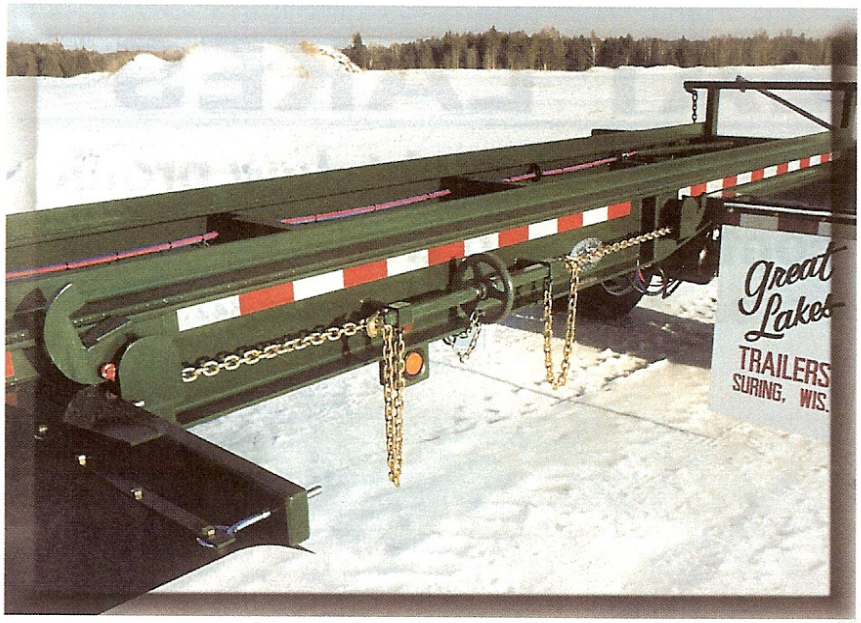

- ***Four heavy duty hooks attached manually to containers with a turn buckle speed wheel.***
- ***Two front and two rear winches with straps for additional tie down security.***
- ***Rubberized fenders over all tires.***
- ***Anti-sail, anti-spray mud flaps.***
- ***When turntable back up lock is activated, back up lights illuminate.***

STANDARD SPECIFICATIONS

Model SR 2440 and Model TR 2450

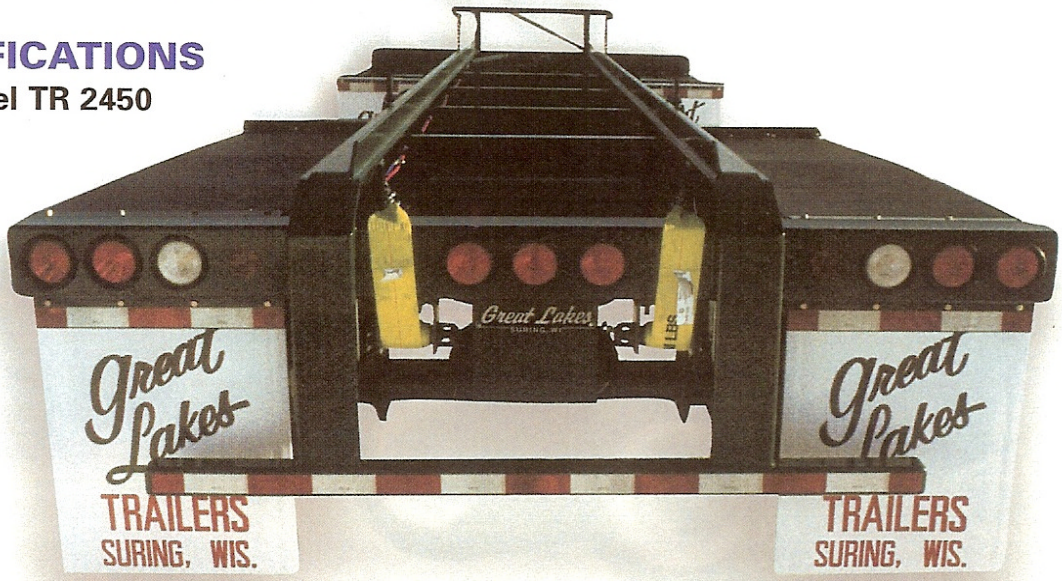

AXLES
25,000# Rating

SUSPENSION
H-9700 Hutch Spring

SPRINGS
2 leaf win 101

WHEELS
10 hole hub pilot
Uni mount

TIRES
255/70 R 22.5 Radials

MAIN FRAME
10½ I Beam

TURN TABLE
38" Double roller bearing (greaseable) with electric over air back up lock

TONGUE
120" with premier pintle eye and hinge assemblies with spring loaded ratchet adjustment

FENDERS
Rubber belted over all tires

LIGHTS
All sealed beam

WIRING
Grote blue seal molded harness

PAINT
Sandblasted-pressure treated with iron phosphate and coated with polyurethane finish coats

OPTIONS
Air ride suspension
Various axle combinations and weights
Tongue lengths and trailer lengths

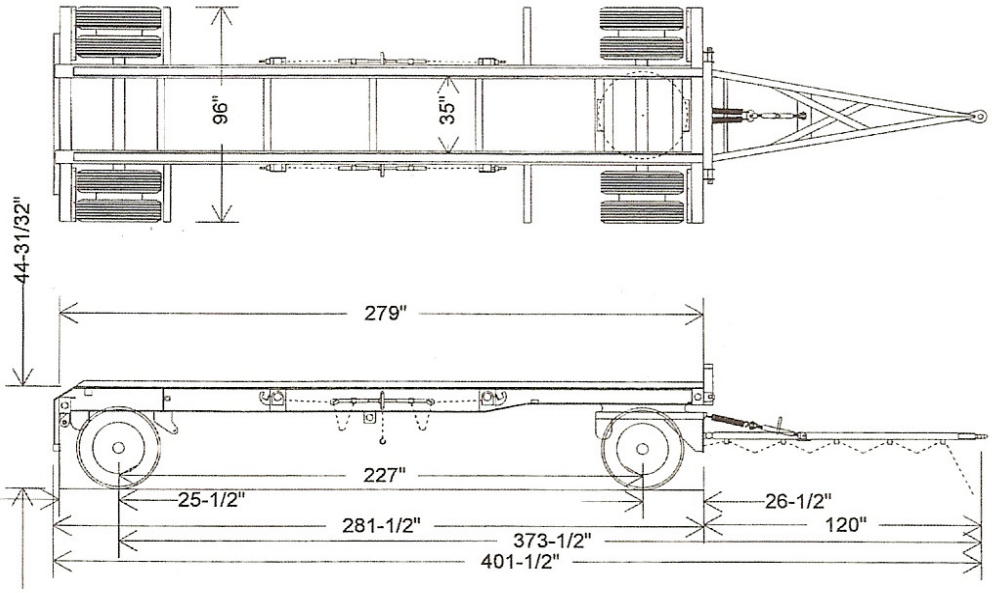

**We reserve the right to make design and specification changes without notice.*