Integral Flanged Valves- Gate Type- Bolted Bonnet- Full Port

BONNEY FORGE

2500 Lb.

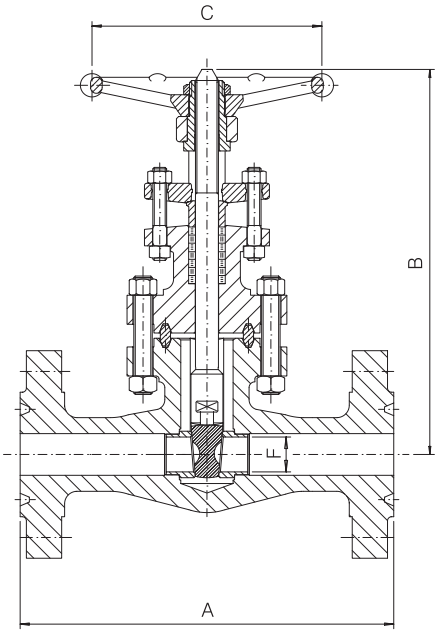

Design construction:
ASME B16.34 - BS 5352
Full port type
Testing according to API 598
Marking MSS SP25
Outside Screw and Yoke (OS&Y)
Self aligning two piece packing gland
Body Bonnet Gasket ring joint type
Spiral wound type gasket on request
Integral backseat
Integral body flanges
Face to face according to ASME B16.10
Flanges according to ASME B16.5
Ratings:
- carbon steel class 2500 6170 psig @ 100°F
425 bar + 38°C

2500 LB.

FULL PORT – FIG. 25RR 10						
SIZE	inch mm	1/ 2 15	3/4 20	1 25	1 1/2 40	2 50
A	inch mm	10.39 264	10.75 273	12.13 308	15.25 387,5	17.87 454
B open	inch mm	11.10 282	11.42 290	13.19 335	15.98 406	16.34 415
C	inch mm	5.43 138	5.43 138	6.77 172	9.21 234	12.60 320
F	inch mm	.45 11,5	.59 15	.76 19,5	1.10 28	1.50 38
Weight	lb. kg	35.5 16,2	38.75 17,6	63.75 29	132.25 60	143.25 65
PACKING		2B4	2B4	BH8	2B8	25B8
GASKET		R16	R16	R16	R19	R22

Materials and trim specifications Page 91