Gate Valves- Extended Body- Standard Port- Integral Reinforced - Valvolet® End & Lip End Welded & Bolted Bonnet

BONNEY FORGE

800 Lb.
1500 Lb.

Design construction:
API 602 - ASME B16.34
Testing according to API 598
Marking MSS-SP-25
Integral extended body
Outside Screw and Yoke (OS&Y)
Self aligning two piece packing gland
Spiral-wound gasket
Body-bonnet weld to ASME IX
Integral backseat
Socket Weld Ends to ASME B16.11
Screwed Ends (NPT) to ASME B1.20.1
Butt Welding Ends to ASME B16.25
Rating:
-carbon steel class 800 — 1975 psig @ 100°F / 138 bar + 38°C
-carbon steel class 1500 — 3705 psig @ 100°F / 255 bar + 38°C

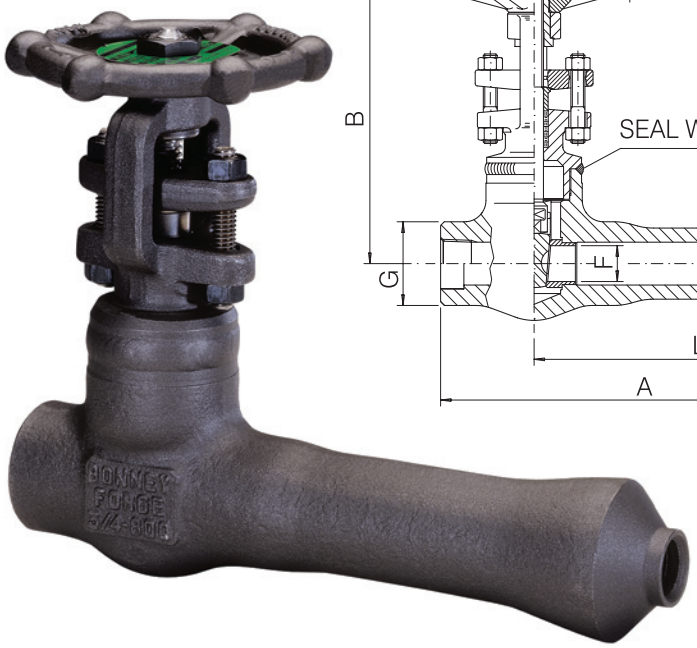

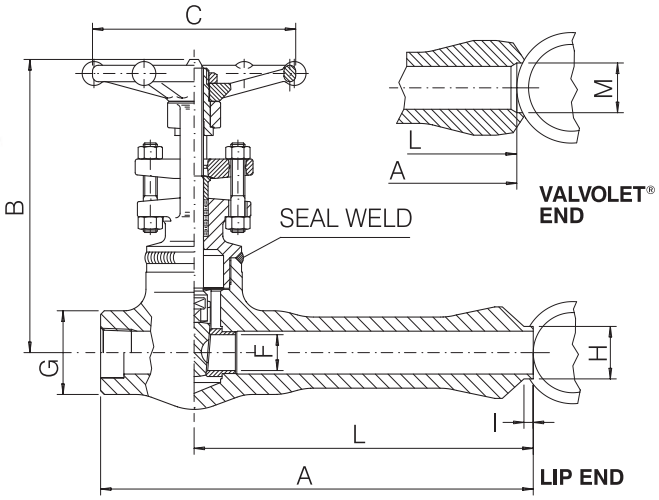

800 LB. — BOLTED BONNET – FIG. VLL 10 / WELDED BONNET – FIG. VOLL 10

SIZE inch / mm		1/2 15	3/4 20	1 25	1 1/2 40	2 50
A	inch	8.15	8.60	9.62	10.37	10.53
	mm	207	218,5	244,5	263,5	267,5
B open	inch	5.98	6.22	7.72	10.04	11.42
	mm	152	158	196	255	290
C	inch	3.46	3.46	3.82	5.43	5.43
	mm	88	88	97	138	138
F	inch	.38	.55	.71	1.18	1.44
	mm	9,6	14	18	30	36,6
G	inch	1.26	1.50	1.89	2.52	3.07
	mm	32	38	48	64	78
H	inch	.69	.87	1.12	1.61	1.81
	mm	17,5	22	28,5	41	46
I	inch	.16	.19	.19	.25	.31
	mm	4	4,8	4,8	6,3	8
L	inch	6.57	6.81	7.48	7.87	8.03
	mm	167	173	190	200	204
M	inch	.87	1.18	1.44	1.99	2.56
	mm	22	30	36,5	50,5	65
Weight Bolted B.	lb.	5.75	6.75	11.25	21	28.5
	kg	2,6	3,1	5,1	9,5	13
Weight Welded B.	lb.	5	6.25	9.5	19.5	25.75
	kg	2,3	2,9	4,3	8,8	11,7
PACKING		BH2	BH2	BH4	BH6	BY5
GASKET*		G2	G2	G3	G6	G7

1500 LB. — BOLTED BONNET – FIG. 9VLL 10 / WELDED BONNET – FIG. 9VOLL 10

SIZE inch / mm		1/2 15	3/4 20	1 25	1 1/2 40
A	inch	8.60	9.62	10.37	10.53
	mm	218,5	244,5	263,5	267,5
B open	inch	6.02	7.48	8.66	11.10
	mm	153	190	220	282
C	inch	3.46	3.82	5.43	5.43
	mm	88	97	138	138
F	inch	.38	.55	.71	1.18
	mm	9,6	14	18	30
G	inch	1.50	1.89	2.20	3.07
	mm	38	48	56	78
H	inch	.69	.87	1.12	1.61
	mm	17,5	22	28,5	41
I	inch	.16	.19	.19	.25
	mm	4	4,8	4,8	6,3
L	inch	6.81	7.48	7.87	8.03
	mm	173	190	200	204
M	inch	1.18	1.44	1.99	2.56
	mm	30	36,5	50,5	65
Weight Bolted B.	lb.	8	12.25	23	32
	kg	3,6	5,6	10,5	14,5
Weight Welded B.	lb.	6.25	10.25	19.75	27.5
	kg	2,9	4,7	9	12,5
PACKING		BH3	BH5	BH6	2B5
GASKET*		G1	G2	G3	G5

Materials and trim specifications Page 91
Valvolet® run pipe consolidation sizes Page 93

* Only for Bolted Bonnet type.