Integral Flanged Valves- Check Type- Bolted Bonnet- Full & Standard Port

BONNEY FORGE

600 Lb.

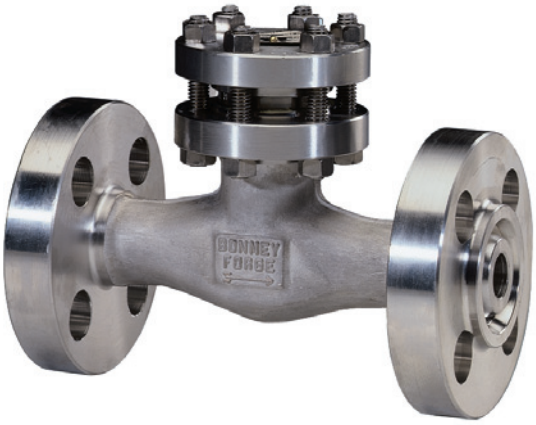

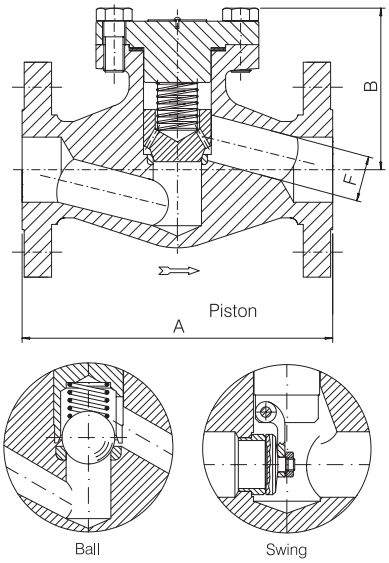

Design construction:
ASME B16.34 - BS 5352
Testing according to API 598
Marking MSS SP25
Spring available on request for Piston and Ball Check Valves
Spiral wound gasket
Integral body flanges
Face to face according to ASME B16.10
Flanges according to ASME B16.5
Ratings:
- carbon steel class 600 1480 psig @ 100°F
102 bar + 38°C

600 LB. — FULL PORT – FIG. 6 40, 6 50, 6 60

SIZE	inch / mm	1/2 / 15	3/4 / 20	1 / 25	1 1/2 / 40	2 / 50
A	inch	6.50	7.51	8.50	9.50	11.50
	mm	165	191	216	241	292
B	inch	2.95	3.54	3.94	4.72	5.91
	mm	75	90	100	120	150
F Piston/ F Ball	inch	.51	.68	.88	1.38	1.77
	mm	13	17,5	22,5	35	45
F Swing	inch	.55	.71	.94	1.46	1.89
	mm	14	18	24	36,6	48
Weight	lb.	8.25	14.25	18.5	35.25	50.5
	kg	3,8	6,5	8,5	16	23
GASKET		G2	G3	G4	G7	G9

600 LB. — STANDARD PORT – FIG. L6 40, L6 50, L6 60

SIZE	inch / mm	1/2 / 15	3/4 / 20	1 / 25	1 1/2 / 40	2 / 50
A	inch	6.50	7.51	8.50	9.50	11.50
	mm	165	191	216	241	292
B	inch	2.83	3.15	3.35	4.53	5.12
	mm	72	80	85	115	130
F Piston/ F Ball	inch	.35	.51	.68	1.16	1.38
	mm	9	13	17,5	29,5	35
F Swing	inch	.39	.55	.68	1.16	1.46
	mm	9,6	14	17,5	29,5	36,6
Weight	lb.	7.5	12.5	17.5	31.75	43
	kg	3,5	5,7	8	14,5	19,5
GASKET		G2	G2	G3	G6	G7

Materials and trim specifications Page 91