4K

PXW-Z100

4K HANDHELD XDCAM® MEMORY CAMCORDER

Version 3.0 Update

XDCAM XAVC Sony Lens G Exmor R CMOS Sensor XQD

Capture high-quality images with stunning 4K resolution.

The Sony PXW-Z100 is an affordable professional camcorder designed to expand the range of 4K recording possibilities. The PXW-Z100 uses the Exmor R™ CMOS sensor capable of 4K resolution (4096x2160) at 60fps, but weighs only 6.61 pounds, even with a 4K-compatible high-performance G lens™ mounted.

The recording format is XAVC, which was first used in the PMW-F55 digital cinema camcorder. As with the F55, 4K 60p 4:2:2 10-bit recording is possible at a high bit rate of 600Mbps. QFHD (3840x2160) and HD (1920x1080) resolutions, which have a high compatibility with 4K TV, can also be selected. For extended recording, XAVC LongGOP (QFHD 4:2:0 8 bit/Full HD 4:2:2 10 bit) is supported from version 3.0 firmware upgrade. Since the PXW-Z100 can be used in the same way as conventional professional handheld cameras, it's possible to record 4K content with minimal staff. In addition, during editing, downscaling from 4K to HD provides a new workflow for HD content production.

4K (4096x2160) 60p shooting with a handheld camera

The PXW-Z100 provides high sensitivity due to the back-illuminated Exmor R CMOS sensor even in 4K shooting. With 8.8 million effective pixels, the 1/2.3" sensor captures 4K images at 50fps or 60fps. The built-in high-performance G Lens offers maximum shooting flexibility, including a wide angle of 30mm in 4096x2160 mode or 31.5mm in 3840x2160 and 1920x1080 modes and 20x powerful optical zoom (equivalent to 35mm).

XAVC format for recording 4K/HD 60p with 4:2:2 10-bit at 600Mbps

This camcorder uses the XAVC recording, efficient MPEG-4 AVC/H.264 compression is used for HD (1920x1080), QFHD (3840x2016) and 4K (4096x2160) video. Image sampling is 4:2:2 10-bit, with an intra-frame system that compresses each frame individually at a maximum bit rate of 500Mbps or 600Mbps during 4K 50fps or 60fps recording.

XAVC

NEW

XAVC LongGOP mode supported

For extended recording, XAVC LongGOP (QFHD 4:2:0 8bit / Full HD 4:2:2 10 bit) is supported from version 3.0 firmware upgrade.

PXW-Z100 4K & HD Recording Format

Format	Resolution	Wrap	Frame Rate	Bit Rate	Approx...Rec Time 64GB x1
XAVC 4K Intra 422 10-bit	4096x2160 3840x2160	MXF	60p	600 Mbps	10 min
			50p	500 Mbps	15 min
			30p	300 Mbps	20 min
			25p	250 Mbps	25 min
			24p	240 Mbps	30 min
XAVC HD Intra 422 10-bit	1920x1080	MXF	60p	223 Mbps	30 min
			50p	223 Mbps	30 min
			30p	112 Mbps	60 min
			25p	112 Mbps	60 min
			24p	89 Mbps	75 min
XAVC 4K Long 420 8-bit	3840x2160	MXF	60p/50p	150 Mbps	40 min
			30p/25p/24p	100 Mbps	60 min
XAVC HD Long 422 10-bit	1920x1080	MXF	60p/50p/30p/25p/24p 60i/50i	50 Mbps	120 min
			60p/50p/30p/25p/24p 60i/50i	35 Mbps	170 min
			60i/50i	25 Mbps	220 min

XQD™ Memory Card as the recording media

Using a PCI Express (expansion bus, serial transfer) interface, the industry standard, an original Sony controller capable of high-speed data processing enables the use of XQD Memory Cards offering the advantage of high write and read speed. Stable recording is possible at a bit rate of 600Mbps.

The PXW-Z100 features two XQD Memory Card slots. Multiple cards can be used in various ways, such as for relay recording. When the first card becomes full, recording continues on the second card without a break.

*The use of new S Series XQD cards (180MB/s transfer speed supported QD-S32E, QD-S64E) is recommended.

XQD™

High-quality audio

The PXW-Z100 is equipped with two XLR connectors for professional microphones, such as the ECM-680S/MS2/678/674/673/VG1, and for wireless microphone systems, such as the UWP-V1/V2. By combining the built-in stereo microphone with external microphone input, users can record up to four channels of 24-bit 48-kHz high-quality audio.

HDMI® interface (HDMI 2.0) for 4K output and 3G HD-SDI interface for HD output

When connected to Sony's 4K-compatible BRAVIA™ TV, an original Sony system enables display of 4K 60p/50p footage. Latest firmware provides compatibility with the latest HDMI standard (HDMI® 2.0) and enables 4K 50p/60p output to a wider range of devices. Other features include a 3G HD-SDI interface that supports output to an SDI of up to HD 60p. It also supports HD output during 4K recording.

*Cannot output 4K (HDMI) and HD (3G HD-SDI) simultaneously.

Timecode IN/OUT

A truly professional tool, the PXW-Z100 comes equipped with Timecode Input/Output connectors. These allow users to synchronize the timecode with other cameras, enabling easier multi-camera productions.

Remote control with WiFi®

Focus, zoom and aperture settings and record start/stop can be remote controlled using the browser function of a smartphone.

Paint function for more creative freedom

This enables adjustment of gamma curve, black level, skin detail, color and other parameters that determine image characteristics. Parameter settings can be recorded as a camera profile on a memory card, then used to set the same parameters in another PXW-Z100 to enable matching of quality and image tones when using a multi-camera setup.

Focus assist functions

Various functions are provided to help with precise control of focus. These include Color Peaking, One-push Auto Focus, Focus Magnifier, and Auto Focus function.

Specifications

	PXW-Z100
General	
Weight	Approx. 5 lb 6.75 oz (Approx. 2.46 kg)
	(Approx.. 6 lb 6.7 oz (Approx... 2.91 kg) (with lens hood, eyecup, NP-F970 battery, ECM-XM1 Mic.,)
Dimensions (W x H x D)*	189 x 193 x 362 mm (7 7/16 x 7 19/32 x 14 1/4 inches) (without protrusions)
Power Requirements	7.2 V (battery pack); 12.0 V (AC Adaptor)
Power Consumption	Approx... 14.9 W (while recording, EVF On)
	Approx... 15.2 W (while recording, LCD monitor On)
Operating Temperature	0°C to 40°C (32°F to 104°F)
Storage Temperature	-20°C to +60°C (-4°F to +140°F)
Battery Operating Time	Approx... 165 min with NP-F970 battery (while recording, EVF On)
	Approx... 160 min with NP-F970 battery (while recording, LCD monitor On)
Recording Format (Video)	XAVC (AVC/H.264 High 4:2:2 Intra Profile)
	4K: VBR, 600 Mbps max.
	HD: SMPTE RP2027 Class100 compliant
	XAVC-L (AVC/H.264 High Profile)
	QFHD 4:2:0 8bit VBR, 150Mbps max.
	XAVC-L (AVC/H.264 High 4:2:2 Profile)
	HD : 4:2:2 10bit VBR, 50Mbps max.
Recording Format (Audio)	LPCM 8CH (2CH recording/playback), 24-bit, 48-kHz
Recording Frame Rate	XAVC-I 4K (4096 x 2160): 23.98p/25p/29.97p/50p/59.94p
	XAVC-I QFHD (3840 x 2160): 23.98p/25p/29.97p/50p/59.94p
	XAVC-I HD (1920 x 1080): 23.98p/25p/29.97p/50p/59.94p
	XAVC-L QFHD (3840 x 2160): 23.98p/25p/29.97p/50p/59.94p
	XAVC-L HD (1920 x 1080): 23.98p/25p/29.97p/50p/50i/59.94p/59.94i
Recording/Playback Time	XAVC QFHD Intra 29.97P
	Approx... 20 min with QD-S64 (64 GB) memory card
	Approx... 10 min with QD-S32 (32 GB) memory card
	XAVC FHD Intra 59.94P
	Approx... 30 min with QD-S64 (64 GB) memory card
	Approx... 15 min with QD-S32 (32 GB) memory card
	XAVC-L QFHD 29.97P (100Mbps)
	Approx... 60 min with QD-S64 (64 GB) memory card
	Approx... 30 min with QD-S32 (32 GB) memory card
	XAVC-L HD 59.94P (50Mbps)
	Approx... 120 min with QD-S64 (64 GB) memory card
	Approx... 60 min with QD-S32 (32 GB) memory card
Lens	
Lens Mount	Fixed
Zoom Ratio	20x (optical), servo/manual
Focal Length	f=4.1 - 82.0 mm equivalent to f=30.0 - 600 mm on 35 mm lens (17:9) equivalent to f=31.5 - 630 mm on 35 mm lens (16:9)
Iris	F1.6 - F11 auto/manual selectable
Focus	AF/MF selectable, 10 mm to ∞ (Wide), 800 mm to ∞ (Tele)
Image Stabilizer	ON/OFF selectable, shift lens
Filter Diameter	M72 mm

Camera Section	
Imaging Device (Type)	1-chip 1/2.3 type back-illuminated "Exmor R" CMOS Sensor
Imaging Device (Pixel Count)	18.9M (total), 8.8M (effective)
Built-in Optical Filters	OFF: Clear, 1: 1/4ND, 2: 1/16ND, 3: 1/64ND
Minimum Illumination	60P: 4lux (1/30 Shutter Speed)
	50P: 3lux (1/25 Shutter Speed)
Shutter Speed	1/3 sec to 1/9,000 sec
Slow & Quick Motion Function	1080p: Frame rate selectable 1.2.4.8.15.30,60 fps in NTSC area
	1080p: Frame rate selectable 1.2.3.6.12.25,50 fps in PAL area
White Balance	Preset (Outdoor: 5600K), A, B
Gain	0, 3, 6, 9, 12,15, 18, 21, 24, 24 dB, AGC
Gamma Curve	Selectable
Input/Output	
Audio Input	XLR-type 3-pin (female) (x2), line/mic/mic +48 V selectable
Composite Output	Composite Video Out (RCA pin)
Audio Output	RCA pin
SDI Output	BNC (x1), HD/SD selectable
Timecode Input	RCA pin (The same terminal is used for Timecode Input/Output)
Timecode Output	RCA pin (The same terminal is used for Timecode Input/Output)
USB	mini-B/USB2.0 Hi-speed/mass-storage (x1),TypeA/USB2.0 Hi-speed /Host (x1)
Headphone Output	Stereo mini jack (x1)
Speaker Output	Monaural
DC Input	DC jack
Remote	Stereo mini mini jack (x1)
HDMI Output	Type A (x1)
Monitoring	
Viewfinder	0.45 type color LCD: 852 (H) x 480 (V), 16:9
Built-in LCD Monitor	3.5 type Xtra Fine LCD™
Built-in Microphone	
	Omni-directional stereo electret condenser microphone.
Media	
Type	XQD x2 (for XAVC) Memory Stick Duo™ and SD/SDHC/SDXC compatible x1 (for AVCHD) (AVCHD format will be updated) SD/SDHC/SDXC x1 (Utility SD slot)
Supplied Accessoies	
	Lens hood (1), Pre-installed to the Camcorder
	EVF eyecup (1)
	USB cable (1)
	AV connecting cable (1)
	NP-F970 battery pack (1)
	AC-NB12A AC adaptor (1)
	AC-VL1 battery charger (1)
	HDMI Cable (1)
	Wi-Fi dongle (1)
	ECM-XM1Microphone (1)
	Operating instructions (1)
	AC Cable (2)
	Warranty (1)
	CD-ROM: - Operating instructions in PDF (1)

*The values for dimensions are approximate.

Dimensions

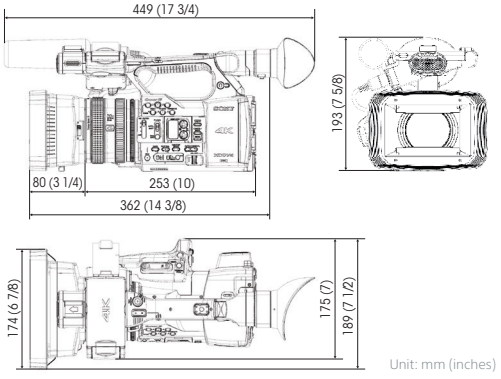

Unit: mm (inches)

Available Accessories

2NP-F970/B
Rechargeable Battery Pack

ACC-L1BP
AC Adaptor/Charger/ Battery Kit

VCT-PG11RMB
Tripod with RM-1BP Remote Controller

LCS-G1BP
Soft Carrying Case

LCS-BP1BP
Soft Carrying Case

RM-1BP
Remote Commander® Unit

QD-S32E/QD-S64E
XQD S Series card
32GB / 64GB

QDA-EX1
XQD ExpressCard Adaptor

MRW-E80
XQD Card Reader

ECM-673/9X
Shotgun Microphone

ECM-MS2
Stereo Microphone

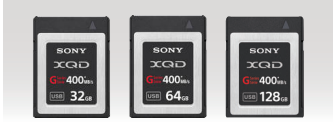

QD-G32A/QD-G64A/QD-G128A
XQD G Series card
32GB / 64GB / 128GB

UWP-V1
Lav Mic, Bodypack TX and Portable RX Wireless System

Sony Electronics Inc.
1 Sony Drive
Park Ridge, NJ 07656
sony.com/xdcam

©2014 Sony Electronics Inc. All rights reserved. Reproduction in whole or in part without written permission is prohibited. Features and specifications are subject to change without notice. Weights and measurements are approximate. Sony, XDCAM, XQD, Memory Stick, XAVC, Exmor R and the Sony logo are trademarks of Sony. AVCHD and AVCHD logo are trademarks of Panasonic Corporation and Sony Corporation. Windows is a registered trademark of Microsoft Corporation in the United States and other countries. Macintosh and Final Cut Pro are trademarks of Apple. SD, SDHC and SDXC logs are trademarks of SD-3C, LLC. All other trademarks are the property of their respective owners.

V-2589-A
MK11076V2OHB14SEP

(11/14)