3/2-way Solenoid Valve for pneumatic systems

- Direct-acting
- High cycling rate
- Reduced power consumption
- With manual override
- CNOMO and Bürkert flange interface

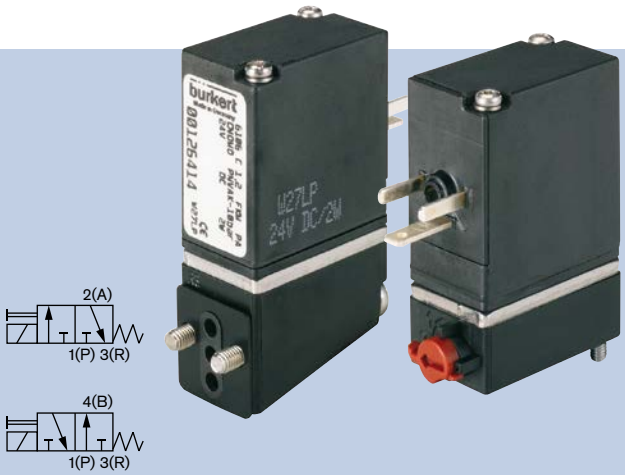

The direct-acting rocker solenoid valve, Type 6106, is especially designed for neutral gaseous mediums.

The valves are generally equipped with a DC coil. When using an AC power source, use an appliance with A rectifier.

The heat input in the medium is minimal, because the housing is separated from the coil by a stainless steel plate.

The valves can be mounted directly or also single or manifold mounted. They are used for dosing, filling, mixing and distributing small quantities of medium.

Technical Data

Orifice	DN0.9 and DN1.2 mm, other on request
Body material	PA (polyamide)
Seal material	FKM
Media	Compressed air, neutral gases (5 µm filtering) technical vacuum
Media temperature	-10 °C to +55 °C
Ambient temperature	-10 °C to +55 °C
Port connection	Bürkert flange below, CNOMO flange sideways
Operating voltages	220-240 V DC, 24 V DC, other voltages on request
Voltage tolerance	±10%
Power consumption	see ordering chart
Cycling rate	Approx. 1000/min
Duty cycle	100% continuous rating
Electrical connection	Tag connector sidewards acc. to DIN EN 175301-803 (previously DIN 43650) for cable plug, Form C, other options on request (not included)
Protection class	IP20 with tag connector, IP65 with cable plug
Installation	As required, preferably with actuator upwards
Response times	acc. ISO 12238:2001; Measured at valve outlet at 6.3 bar and + 20 °C
Opening	Approx. 25 ms (pressure rise 0 to 10%)
Closing	Approx. 25 ms (pressure drop 100% to 10%)

[1] Measured at valve outlet at 6.3 bar and + 20 °C
Opening: pressure rise 0 to 90%, *Closing*: pressure drop 100 to 10%

Envelope Dimensions [mm]

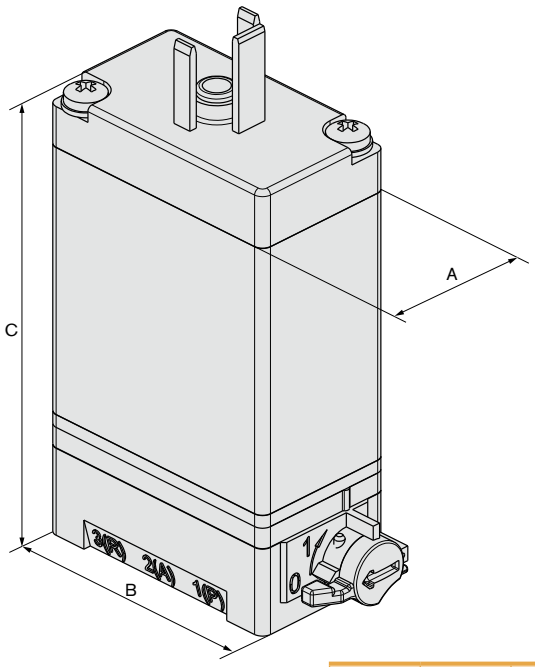

A	B	C
15.5	27	39

Options

- ATEX, UL/CSA approvals
- Available without manual override

Envelope Dimensions [mm]

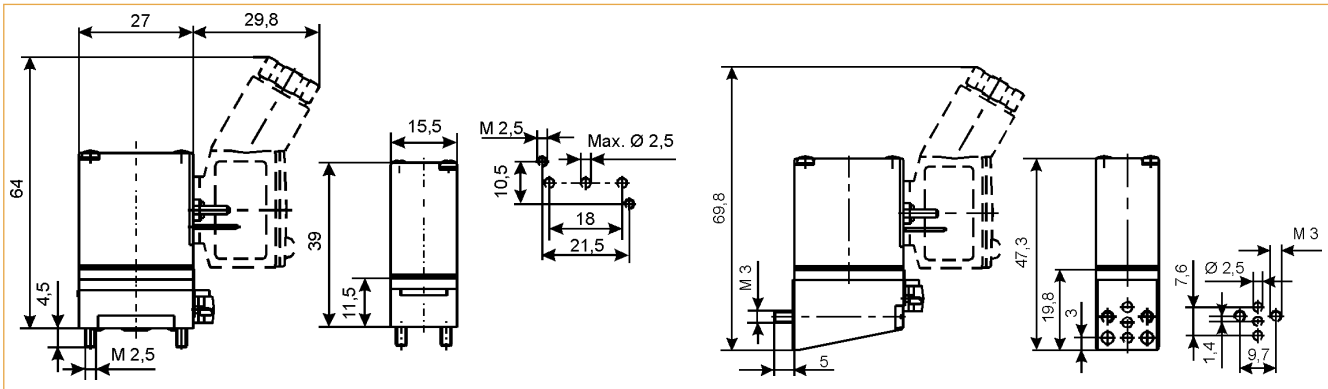

Flange interface for manifold, Bürkert flange

Flange interface for manifold, CNOMO flange

Ordering Chart

Circuit function	Port connection	Orifice [mm]	QNn value air 1 –> 2 [l/min]	QNn value air 2 –> 3 [l/min]	Pressure range [bar]	Circuit function	Power consumption [W]	Item no. per voltage/frequency [V/Hz] 024/DC [1]	220-240/DC [1]
All valves with manual override, tag connector sidewards, mounting screws and flange seal, without cable plug									
C 3/2-way valve normally closed	Bürkert	0.9	22	25	Vac.- 8	monostable	1	126 417	–
	Bürkert	1.2	40	47	Vac.-10		2	126 411	–
							3	–	126 413
D 3/2-way valve normally open	Bürkert	0.9	22	25	Vac.- 8		1	126 421	–
	Bürkert	1.2	40	47	Vac.-10		2	126 419	–
C 3/2-way valve normally closed	CNOMO	0.9	22	25	Vac.- 8		1	126 418	–
	CNOMO	1.2	33	38	Vac.-10		2	126 414	–
							3	–	126 416
D 3/2-way valve normally open	CNOMO	0.9	22	25	Vac.- 8		1	126 422	–
	CNOMO	1.2	33	38	Vac.-10		2	126 420	–

[1] When using an AC power source, use an appliance with a rectifier.

Unit	Features	Item no.
Single manifolds from aluminium, black anodised		
Single manifold	for Bürkert flange, 16 mm width, M5	623 873
	for Bürkert flange, 16 mm width, G 1/8"	634 917
	for Cnomo flange, 16 mm width, M5	639 885
Single module with plug-in coupling	for single or series connection of valves with Bürkert flange	643 566
Complete mounting kit	for standard rail TS 35 x 7.5 mm	629 254
Blanking plate kit	for unused valve positions on Bürkert plates	629 327
	for unused valve positions on Cnomo plates	639 695
Banjo coupler with banjo bolts	G 1/8, with tube hose connector Ø 6 mm, for pilot valve	781 126
	G 1/4, with tube hose connector Ø 6 mm, for pilot valve	781 735

Accessories

No. of valve modules	Dimensions A [mm]	Dimensions B [mm]	Item no. G 1/8" and M5	Length L [mm]	Item no. G 1/8" and M5
Multiple manifolds made from aluminium					
	Bürkert flange, width/station 18 mm			**CNOMO flange, width/station 16.5 mm**	
2	60	18	658 695	33	639 887
3	78	36	658 696	49.5	639 862
4	96	54	658 697	66	639 863
5	114	72	658 698	82.5	639 864
6	132	90	658 699	99	639 865
8	168	126	658 700	132	639 866
10	204	162	658 701	165	639 867
12	240	198	658 703	198	639 868

Dimensions single manifolds for Bürkert flange [mm]

Manifold in aluminium,
black anodised, port connection M5

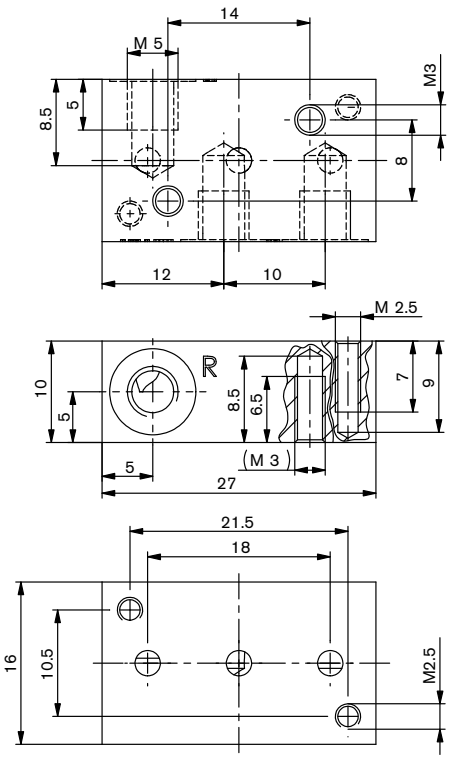

Manifold in aluminium,
black anodised, port connection G 1/8

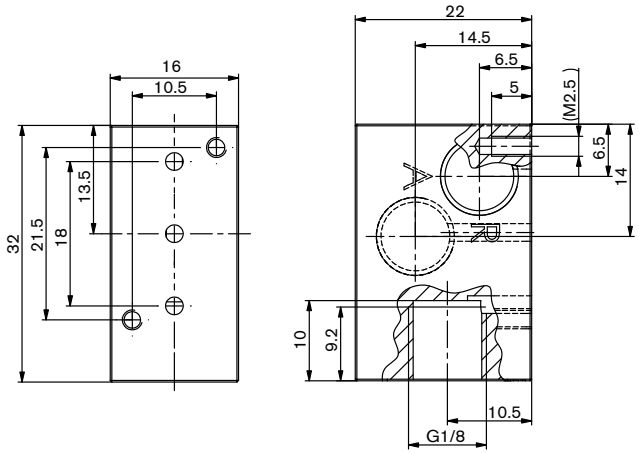

Dimensions single manifolds for CNOMO flange [mm]

Manifold for CNOMO flange,
black anodised, port connection M5

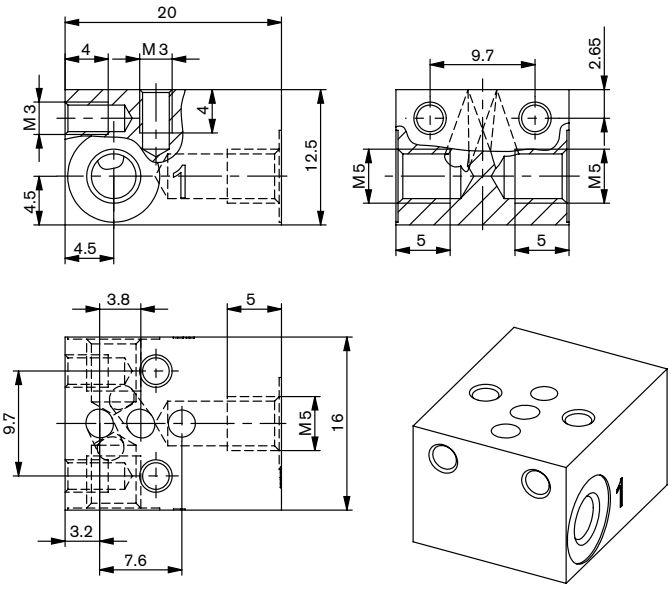

Mounting kit, complete for standard rail
TS35 x 7.5 mm

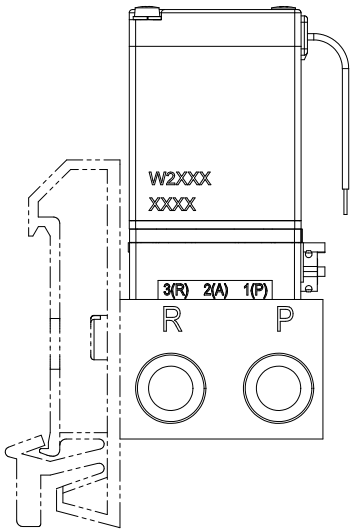

Dimensions multiple manifolds CNOMO flange 3-way [mm]

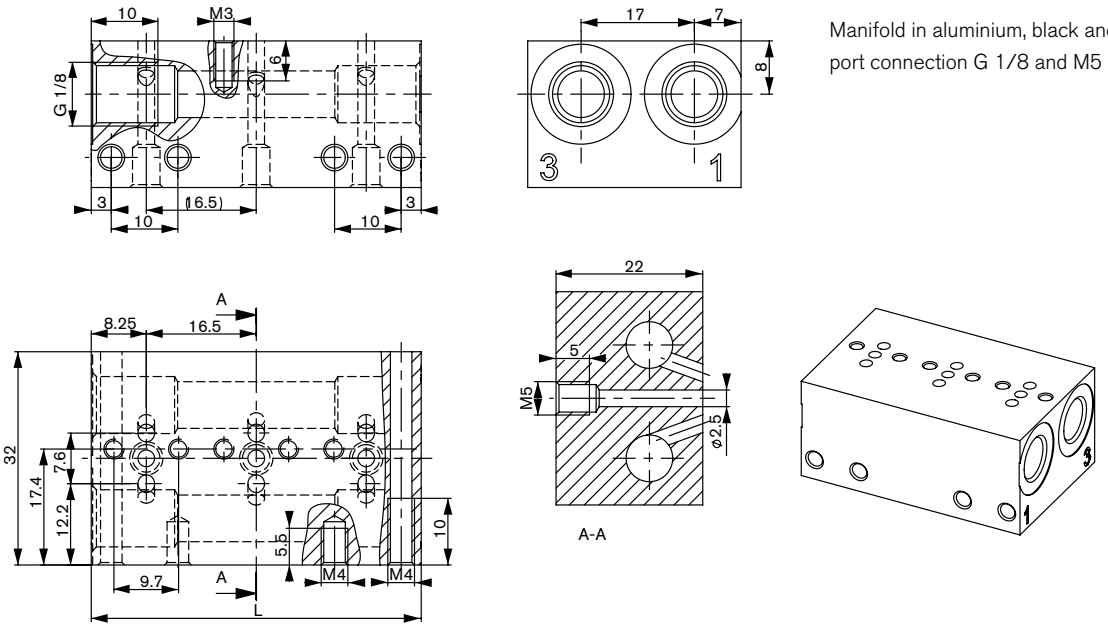

Manifold in aluminium, black anodised,
port connection G 1/8 and M5

Manifold	L
2-way	33
3-way	49.5
4-way	66
5-way	82.5
6-way	99
8-way	132
10-way	165
12-way	198
Blanking plate kit	for non-configured valve positions