K-FLO

BUTTERFLY VALVES

INSTALLATION, OPERATION AND MAINTENANCE FOR SERIES 500 K-FLO BUTTERFLY VALVES

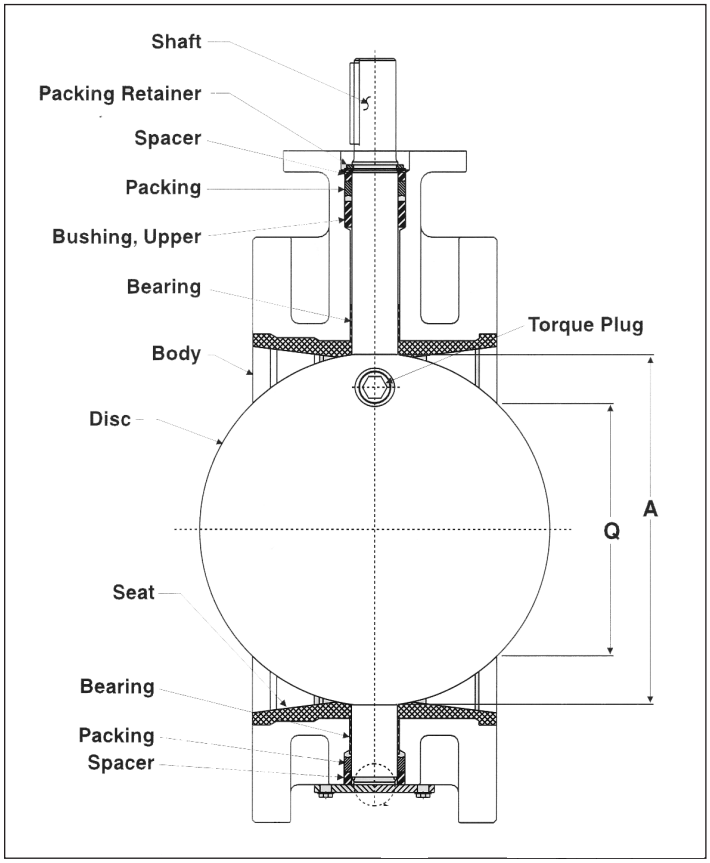

Crispin

PO Box 411
Berwick PA 18603

800-247-VALV
www.crispinvalve.com

Product Introduction -- K-FLO Series 500: 3”-20”

Introduction

K-Flo Series 500 Butterfly Valves are heavy-duty, rubber seated butterfly valves in full compliance with AWWA-C504 for use in municipal water treatment, power generation, and industrial applications.

Instructions

These instructions are intended for personnel who are responsible for the installation, operation and maintenance of your K-FLO AWWA butterfly valve.

Safety Messages

Safety label(s) on the product indicate hazards that can cause equipment damage, personal injury or death. If a safety label becomes obscured or has been removed, contact Crispin Valve.

Personnel involved in the installation or maintenance of valves should be constantly alert to the potential emission of process material and take appropriate safety precautions. Always wear suitable protection when dealing with hazardous process materials. Handle valves which have been removed from service with the assumption that process material could be present within the valve.

Inspection

Your AWWA butterfly valve has been packed to provide protection during shipment. Inspect the unit for damage upon arrival and file a carrier claim if damage is apparent.

Parts

Order parts from your local sales representative, or directly from Crispin Valve.

Crispin Valve Service

Crispin service personnel are available to install, maintain and repair Crispin Valves and products. Crispin also offers customized training programs and consultation services. For more information, contact your local Crispin/K-FLO Valve sales representative or visit www.crispinvalve.com

Description

K-FLO AWWA Butterfly Valves are heavy-duty, rubber seated in body butterfly valves in full compliance with AWWA C-504 for use in municipal water treatment, power generation, and industrial applications. They utilize bearings that are of the self-lubricating type which provide strength and low friction for easy operation and lifetime service. No special periodic maintenance is needed.

Flange Requirements

K-FLO Butterfly Valves are designed for installation between ANSI B16.1 Class 125# flat faced flanges. Mechanical joint valves are designed for use with AWWA C111 end connections. MJ accessories for the pipe used must be supplied by the installing contractor. Class 250 valves can be ordered with either ANSI B16.1 250# drilling, ANSI B16.1 125# drilling or AWWA C111 MJ ends.

Installation

Failure to lift the valve properly may cause damage. The valve should be lifted only by non-metallic slings attached to the valve mounting plate or the valve flange holes.

Never lift the valve by its actuator or by the valve body opening. Adjacent piping must be positioned so that minimal piping stresses are transmitted to the flanges during and after installation.

The valve shaft axis may be either vertical or horizontal. If possible, the valve should be located at least six pipe diameters downstream of all pumps, elbows, or tees (see Figure 2).

NOTE: The valve disc must be in the closed or nearly closed position before installation of the valve in the pipeline. This is to protect the disc seating edge. The valve may be installed with the flow in either direction; but, seat adjustment is facilitated when the flat side of the disc is positioned downstream (see Figure 1).

WARNING: Moving Parts from accidental operation of a power actuator can cause personal injury or equipment damage. Disconnect and lock out power to actuator before servicing.

WARNING: The valve is a pressure vessel. Good maintenance and practice dictates that the valve must be depressurized prior to performing maintenance. Isolate the valve in the pipeline by closing the valve that is just upstream, and then the valve that is just downstream (in that order) prior to performing maintenance.

K-FLO Series 500--Maintenance and Repair

Introduction

It is possible that after many years of service, the rubber components of the K-Flo Series 500 valve may show signs of wear. The valve stem packing is a replaceable component. In the unlikely event that the valve seat is severely worn, contact your K-Flo representative. If valve packing leakage should occur, the following procedures should be followed:

Packing Removal *(With actuator removed)*

1. Remove packing retainer which is attached to the slot on the valve shaft.
2. After the packing retainer is removed, pull and remove the spacer and its packing.
3. Repeat the same procedures for removing the lower packing, except first remove the bottom cover plate prior to removing the lower spacer.

Valve Assembly

1. Press both upper and lower bearings into the valve body.
2. Install lower stem packing and lower spacer. Install cover plate with cap screws and washers.
3. Install upper bushing, upper packing, and upper spacer into valve body top stem hole.
4. Install packing retaining ring onto groove on valve stem.
5. Install disc into valve seat. This will require that a lubricant such as silicone oil or grease be applied to the stem hub areas of both the disc and seat.
6. Install stem into valve body top stem hole (operator top plate side). The stem should be installed so that its milled flat aligns with the disc torque plug hole.
7. Torque the plug down through the disc and against the milled flat on the stem to the valves as listed in Table 1 on page C.

Figure 1--Flow Direction

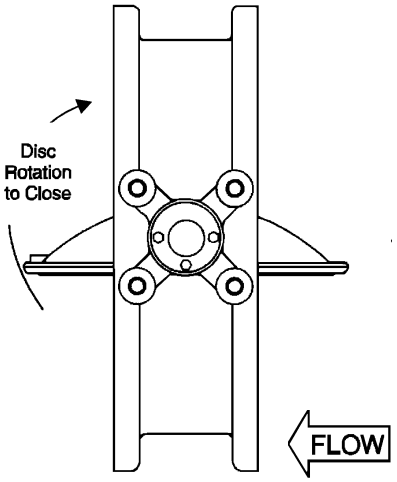

Figure 2--Valve Location

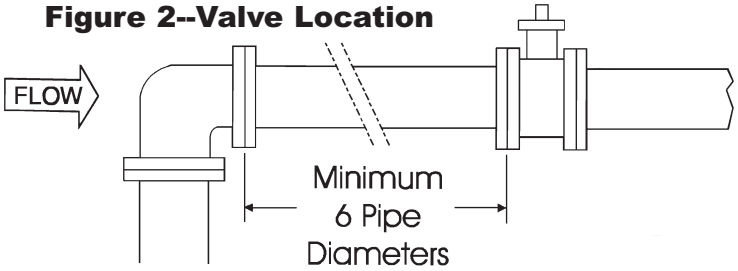

Figure 3--Parts

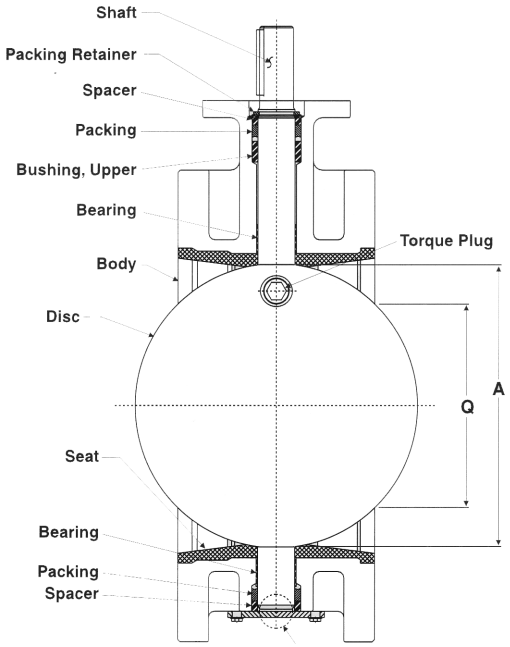

Table 1: Disc Torque Plug Values

Valve Size	Torque, Ft.-lbs.
3”, 4”	30
6”, 8”	210
10”	320
12”	380
14”, 16”	500
18”	620
20”	740

K-FLO Series 500--Troubleshooting

SYMPTOMS	POSSIBLE CAUSE	SUGGESTED REMEDY
Valve opens only a few degrees and stops (it will not open to the full angle desired)	Improper installation. The valve is improperly aligned.	Loosen the flange bolts. Realign valve with flanges, and retighten flange bolts to correct torque per ANSI requirements.
	Mating pipe internal diameter or other obstruction is interfering with disc.	Pipe does not meet standards and spacers may be required. Any pipeline or disc obstruction must be removed.
	Actuator not properly installed	Refer to actuator adjustment manual.
Leakage past the flange face	Flange bolts are not evenly torqued.	Loosen flange bolts and tighten flange bolts to correct torque per ANSI requirements.
	Improper flanges	Refer to "Flange Requirements" on page A.
	Improper flange gaskets	Full face flange gaskets required.
Leakage in the closed position (leakage in the pipeline)	The disc is not closing fully: Actuator is not properly adjusted.	Refer to actuator adjustment manual.
	Damaged valve seat	Replace valve.
	Line pressure exceeds valve's working pressure	Reduce line pressure to valve working pressure.
	Damaged valve disc	Return valve to factory for disc/ stem replacement.
Leakage at the valve stem	Packing failure	1. Fully open and close the valve 3 times. 2. Refer to "Packing Removal" and "Valve Assembly" steps 2-4 on pg. C.
Water hammer	The valve is closing too quickly.	Turn actuator slower.
Excessively high torque to operate valve	Obstruction in the pipeline	Remove valve from pipeline and remove obstruction.
	Valve shaft or disc bent	Return valve to factory for disc/shaft replacement (check for water hammer or freezing of line material).
	Scale buildup on shaft or seat	Open and close the valve several times. Operate the valve at least once a month. Check the valve seat for deterioration.

Recommended Storage Procedures

Ideal storage is in a heated building, palletized and covered. If ideal storage is not possible, following a few simple procedures will assure optimum performance later.

1. Valves should be stored laying flat, fully closed, but must be kept off the ground and high enough to avoid standing water.
2. Support valve weight on flange faces only and verify weight before blocking.
3. Cover completely with tarpaulin and support on wooden cross ribs underneath to prevent water entrapment.
4. If valve is electric motor operated, follow the motor manufacturer's procedures for storage to prevent condensation damage.
5. Verify at the time of storage, and at removal from storage, that actuator lubricant levels are as required by the manufacturer. Lubricant leakage can occur during prolonged horizontal storage.

NOTE: The stem holes through the disc must be properly aligned with the stem holes in the valve seat to allow installation of the valve stem.