DUST-HOG®

DUST COLLECTION SYSTEMS

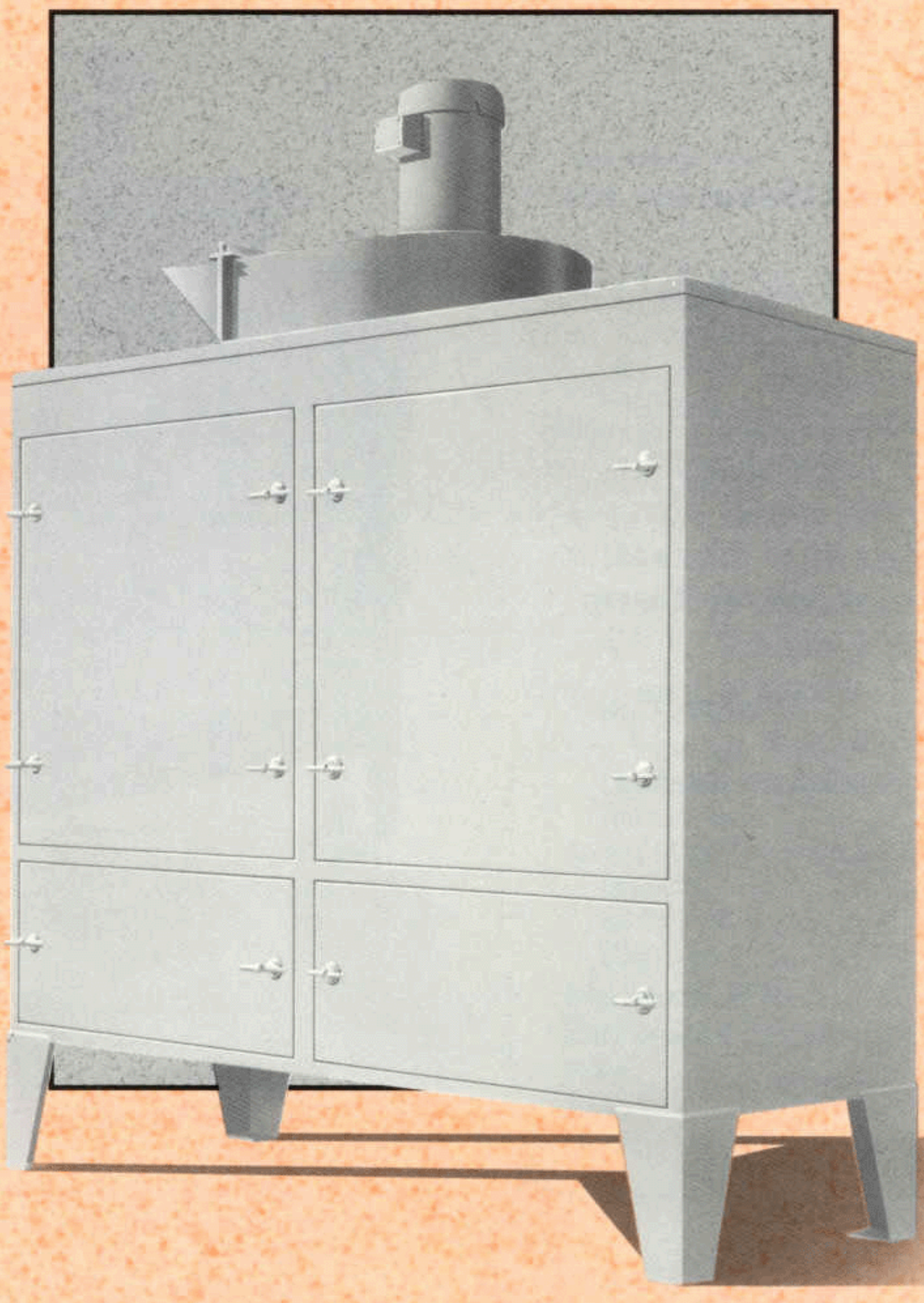

Oil Mist Collectors

Oil Mist Collectors

DUST-HOG® Oil Mist Collectors are ideal for all ducted applications.

High Output Capacity Radial Blade Fans deliver continuous CFM performance over a wide range of installed applications.

Dual Stage Filtration is accomplished using slide in 24″ x 24″ x 2″ wire mesh prefilters and 100 square foot fiberglass primary filters.

Optional Third Stage HEPA Filters are installed when collection efficiency down to 99.97% at 0.3 microns is required.

Sloped Bottom allows liquid to drain from standard 3/4″ NPT fitting.

Legs and Hanger Bracket are standard equipment.

Model F1250

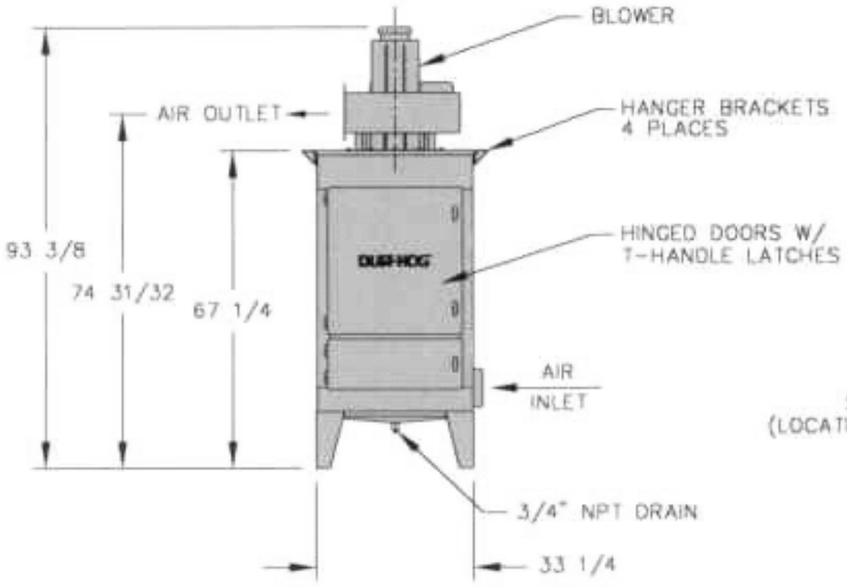

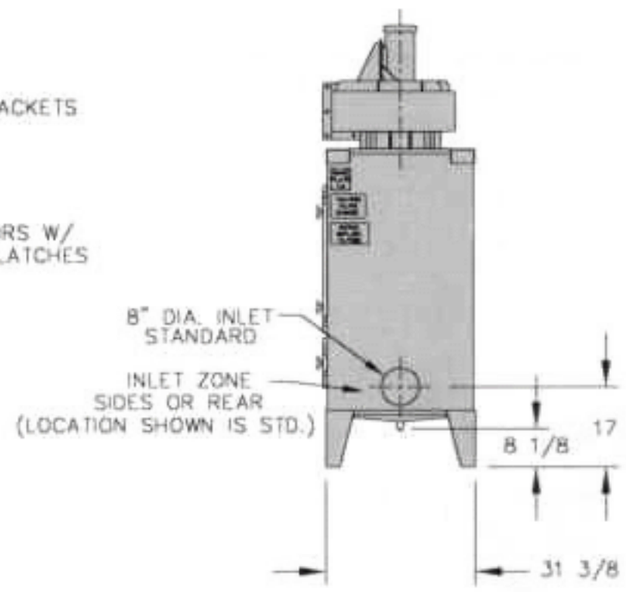

Specifications

First Stage Filter Medium	Wire Mesh
Quantity	1
Dimensions	24″ x 24″ x 2″
Second Stage Filter Medium	Fiberglass
Quantity	1
Dimensions	24″ x 24″ x 34″
Filter Area	107 sq. ft.
Inlet Velocity (FPM)	3,582 (Standard 8″ Inlet)
External Static Pressure	5.5″ @ 1,000 CFM
Motor	3 HP, 230/460/60/3 TEFC
Air Volume	1,250 CFM Nominal
Shipping Weight w/Blower	575 lbs.

Optional Equipment (All Units)

- HEPA Filter Third Stage Filtration
- Silencer Packages
- Three-Phase Motor Starter

DUST-HOG®
DUST COLLECTION SYSTEMS

Model F2500

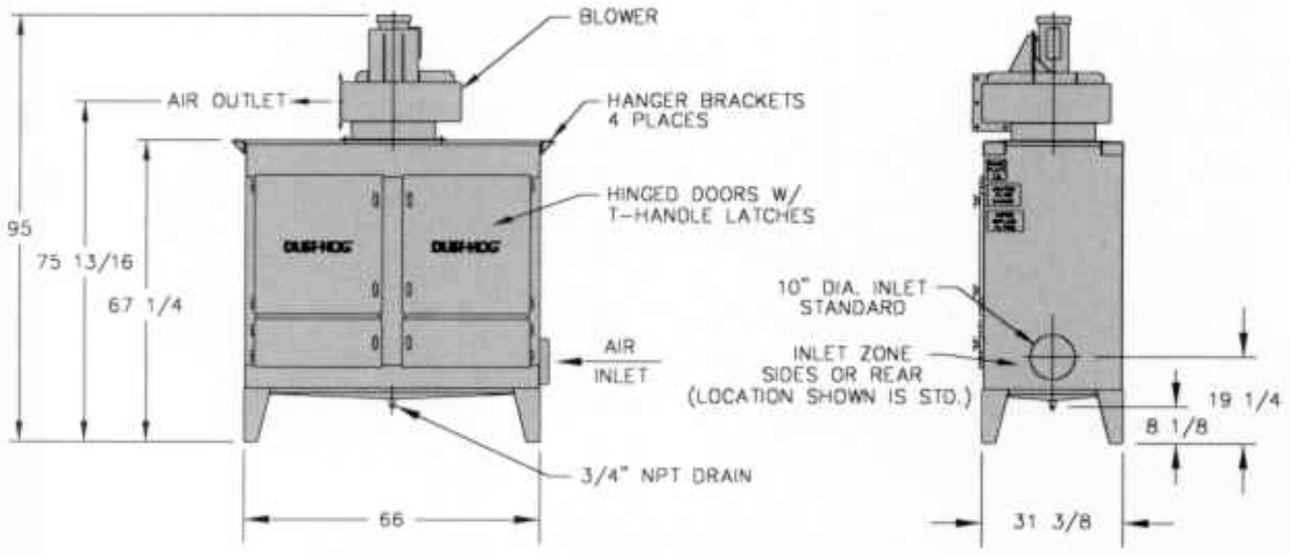

Specifications

First Stage Filter Medium	Wire Mesh
Quantity	2
Dimensions	24″ x 24″ x 2″
Second Stage Filter Medium	Fiberglass
Quantity	2
Dimensions	24″ x 24″ x 34″
Filter Area	214 sq. ft.
Inlet Velocity (FPM)	4,587 (Standard 10″ Inlet)
External Static Pressure	5.5″ @ 2,000 CFM
Motor	5 HP, 230/460/60/3 TEFC
Air Volume	2,500 CFM Nominal
Shipping Weight w/Blower	1,035 lbs.

Model F5000

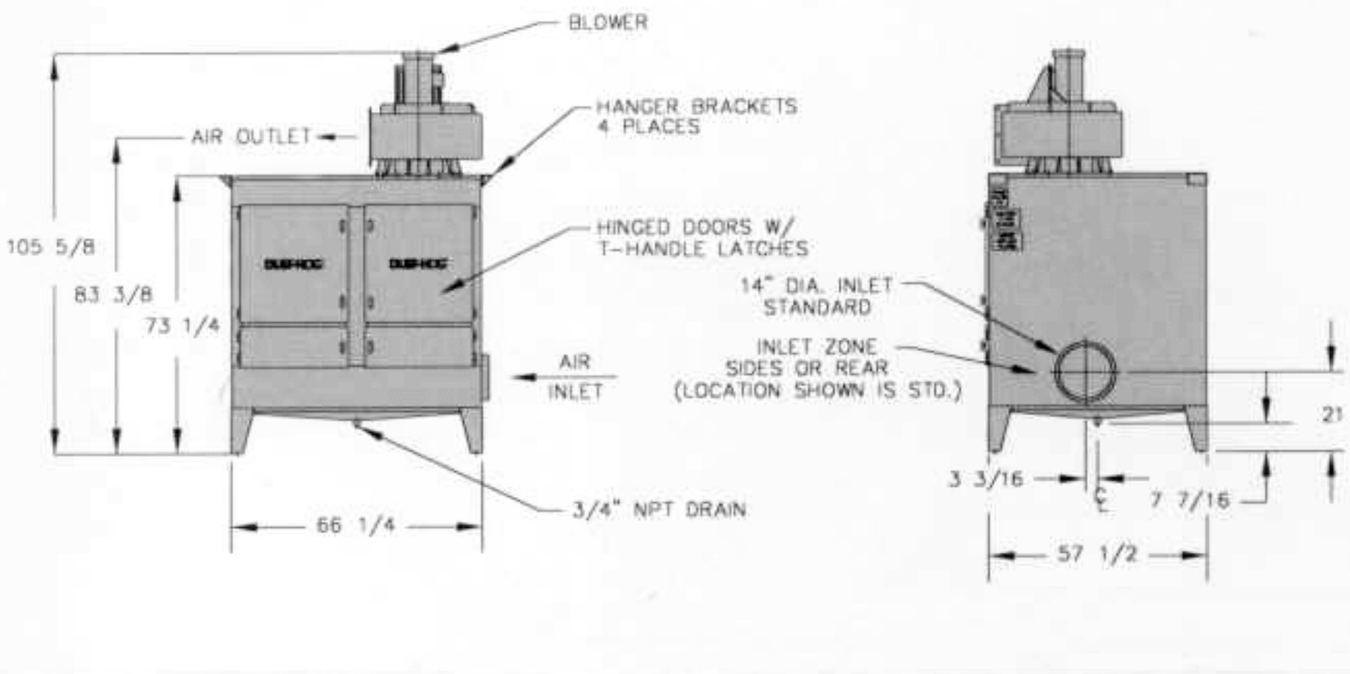

Specifications

First Stage Filter Medium	Wire Mesh
Quantity	4
Dimensions	24″ x 24″ x 2″
Second Stage Filter Medium	Fiberglass
Quantity	4
Dimensions	24″ x 24″ x 34″
Filter Area	428 sq. ft.
Inlet Velocity (FPM)	4,677 (Standard 14″ Inlet)
External Static Pressure	8″ @ 4,000 CFM
Motor	15 HP, 230/460/60/3 TEFC
Air Volume	5,000 CFM Nominal
Shipping Weight w/Blower	1,850 lbs.

Model F7000

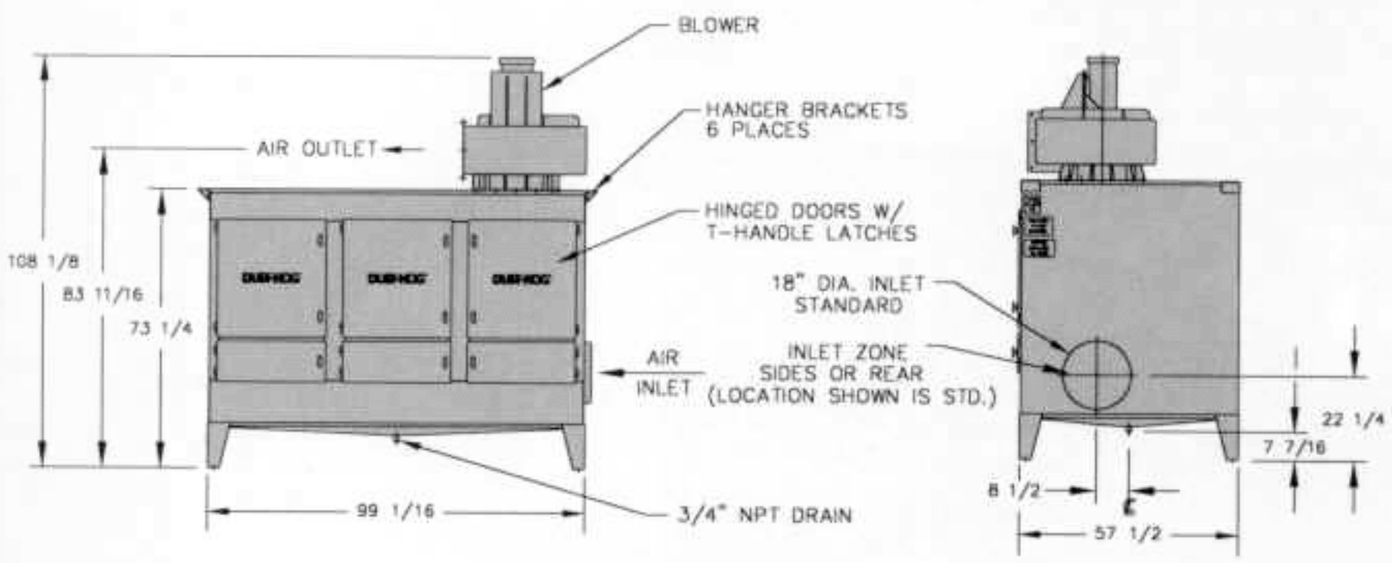

Specifications

First Stage Filter Medium	Wire Mesh
Quantity	6
Dimensions	24″ x 24″ x 2″
Second Stage Filter Medium	Fiberglass
Quantity	6
Dimensions	24″ x 24″ x 34″
Filter Area	642 sq. ft.
Inlet Velocity (FPM)	3,962 (Standard 18″ Inlet)
External Static Pressure	8″ @ 6,000 CFM
Motor	20 HP, 230/460/60/3 TEFC
Air Volume	7,000 CFM Nominal
Shipping Weight w/Blower	2,800 lbs.

UNITED AIR SPECIALISTS, INC.
a CLARCOR company

An ISO 9001 Certified Company

United Air Specialists, Inc. reserves the right to change design or specifications without notice.

DUST-HOG®

DUST COLLECTION SYSTEMS

Air Cleaning Specialists, Inc.
826 Horan Drive
Fenton, MO 63026

Ph: (866) 651-9762
E-mail: info@aircleaningspecialists.com
www.dust-hog.net

©1991, 1999 United Air Specialists, Inc.
DHO 3/99 2.5M CBP