HACH 5500 sc SILICA ANALYZER

Applications

- Power

PROGNOSYS™ READY

Lower Maintenance, Less Downtime

Delivering reliable results that save you critical time and effort.

90 Days of Continuous Run Time

Only two liters of reagent are required for the analyzer to perform unattended for up to 90 days; twice as long as the Series 5000.

Save Time on Maintenance

The industry's only pressurized reagent delivery system eliminates the frequent maintenance associated with pumps.

Avoid Downtime

Predictive diagnostic tools, including Hach's proprietary Prognosys technology, warning LEDs, and high-visibility notification screens let you avoid unplanned downtime.

Clean, Fast and Easy Reagent Change

No more dripping reagents on the instrument, the floor, or your clothing while fumbling with tubes and straws. Simply match the color-coded cap to the sealed reagent bottle and twist gently.

Verify Easily with Hach Lab Products So You Don't Waste Time Second-guessing

Grab Sample In and Grab Sample Out features allow quick analysis of a grab sample poured into the analyzer, and facilitate taking a sample out of the analyzer to verify in a lab test.

HACH®
Be Right™

Specifications*

Measuring Principle	Colorimetric
Range	0 to 5000 µg/L as SiO_2
Accuracy	0–500 µg/L: ±1% or ±1 µg/L of reading, whichever is greater; 500–5000 µg/L: ±5%
Repeatability	± 0.5 µg/L or ± 1 % of reading, whichever is greater
Lower Limit of Detection (LOD)	0.5 µg/L
Response Time	Typically, 9.5 minutes at 25 °C (77 °F); changes with temperature
Reagent Consumption	2 L of each reagent every 90 days with 15 minute cycle time
Operating Temperature Range	5 to 45 °C (41 - 113 °F)
Operating Humidity	5 to 95 % non-condensing (indoor use only)
Sample Pressure	2 to 87 psi (to Preset Pressure Regulator)
Sample Temperature	5 to 50 °C (41 - 122 °F)
Sample Flow Rate	55 to 300 mL/min
No. of Channels	1, 2, 4, 6; programmable sequence
Grab Sample	Grab Sample In and Grab Sample Out capability
Mounting	Wall, panel or table
Fitting	Sample line and sample bypass drain: 6 mm (¼-in.) Air purge inlet: 6 mm (¼-in.)
Output	4 to 20 mA
Dimensions (H x W x D)	31.7 in x 17.8 in x 14.2 in (804 mm x 452 mm x 360 mm)
Enclosure Rating	NEMA 4X/IP56
Certifications	CE (EN 61326-1: 2006; EN 61010-1: 2010; EN 60529: 1991, +A1:2000) KC (EN 61326-1: 2006) C-tick (EN 61326-1: 2006) cETLus (UL 61010-1: 2012; NEMA 250: 2003; CSA C22.2 No 61010-1: 2012)

**Subject to change without notice.*

Principle of Operation

Silica in the sample reacts with molybdate ions under acidic conditions to form silicomolybdic acid complexes. Addition of citric acid destroys the phosphate complexes. Amino Acid Reagent is then added to reduce the yellow silicomolybdic acid to an intense blue color, which is proportional to the silica concentration. Test results are measured at 815 nm.

Dimensions

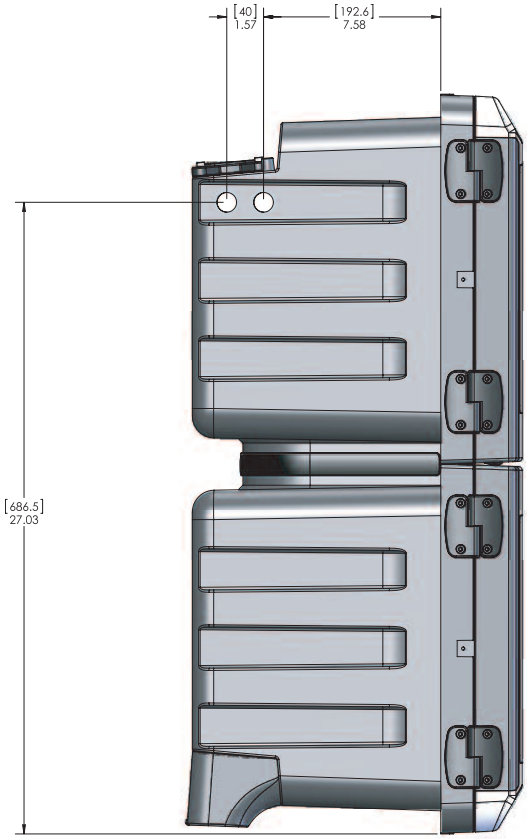

RIGHT SIDE VIEW

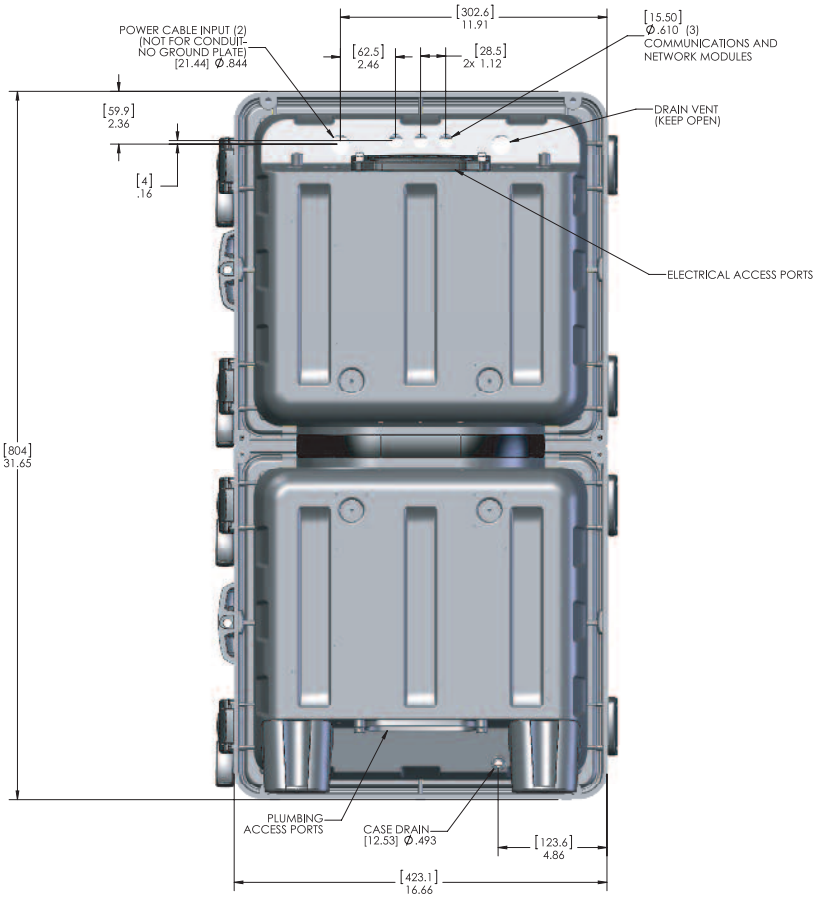

REAR VIEW

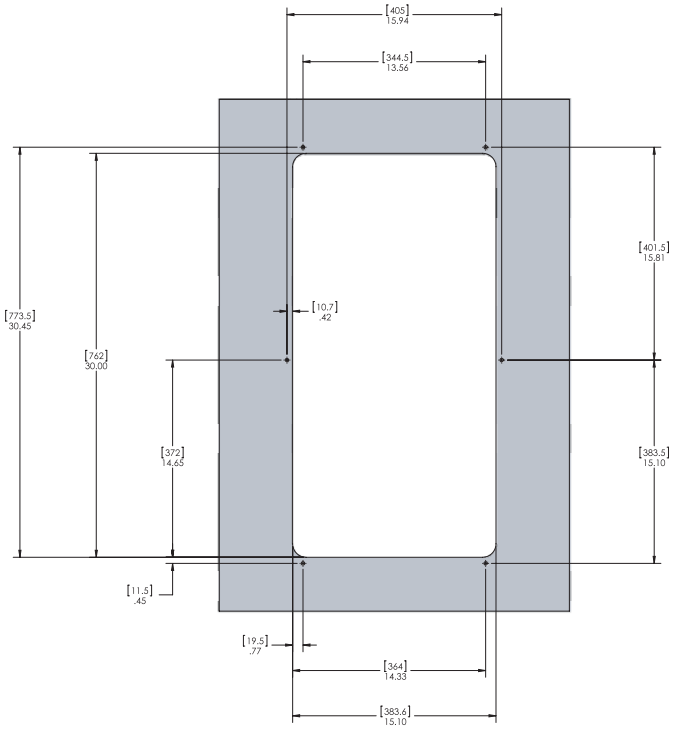

PANEL CUTOUT

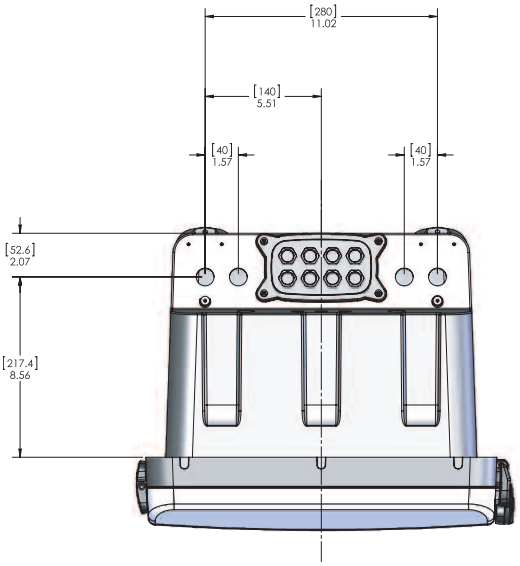

TOP VIEW

Ordering Information

5500.KTO.S0.A1U	Hach 5500 sc Silica Analyzer, Proprietary chemistry only, AC, 1 channel, includes Hach reagents set for start up and up to 90 days of use
5500.KTO.S0.A2U	Hach 5500 sc Silica Analyzer, Proprietary chemistry only, AC, 2 channels, includes Hach reagents set for start up and up to 90 days of use
5500.KTO.S0.A4U	Hach 5500 sc Silica Analyzer, Proprietary chemistry only, AC, 4 channels, includes Hach reagents set for start up and up to 90 days of use
5500.KTO.S0.A6U	Hach 5500 sc Silica Analyzer, Proprietary chemistry only, AC, 6 channels, includes Hach reagents set for start up and up to 90 days of use

Reagents

6783600	5500 sc Silica Reagent set
6774802	5500 sc Reagent 1 Silica 2L
6774902	5500 sc Reagent 2 Silica 2L
6775102	5500 sc Reagent 3 Silica Pkg
6775002	5500 sc Standard 1 Silica 2L

Accessories/Options

6787000	Kit, Retrofit Panel, S5000 to 5500 sc
9179700	Power Cord, North American
6786600	Stainless Steel Sample Adapter Kit
1757700	Sample Cooler
6792500	Module Kit, ModBus (SC200)
6792600	Module Kit, Profibus (SC200)

DOC053.53.35027.May17

HACH COMPANY World Headquarters: Loveland, Colorado USA

United States: 800-227-4224 tel 970-669-2932 fax orders@hach.com
Outside United States: 970-669-3050 tel 970-461-3939 fax int@hach.com
hach.com

C15 Printed in U.S.A.
©Hach Company, 2015. All rights reserved.
In the interest of improving and updating its equipment,
Hach Company reserves the right to alter specifications to equipment at any time.

Be Right™