CAD-FL-PL

CEILING OR WALL ACCESS DOOR, FLUSH DOOR WITH FRAME

Internet address: www.mifab.com Toll Free: 1-800-465-2736 Canada Toll Free: 1-800-387-3880

STANDARD SIZES (special sizes available upon request)

DOOR SIZE Inches "B" x "A"	DOOR SIZE mm "B" x "A"	WALL OPENING Inches	WALL OPENING mm	SHIPPING WEIGHT lbs.	SHIPPING WEIGHT kg.	LATCHES
8 x 8	203 x 203	8 1/2 x 8 1/2	216 x 216	4.0	1.8	1
8 x 12	203 x 305	8 1/2 x 12 1/2	216 x 317	5.0	2.2	1
10 x 10	254 x 254	10 1/2 x 10 1/2	267 x 267	5.5	2.5	1
12 x 12	305 x 305	12 1/2 x 12 1/2	317 x 317	6.0	2.7	1
12 x 16	305 x 406	12 1/2 x 16 1/2	317 x 419	7.0	3.1	1
12 x 18	305 x 457	12 1/2 x 18 1/2	317 x 470	8.0	3.6	1
12 x 24	305 x 610	12 1/2 x 24 1/2	317 x 622	11.4	5.1	1
14 x 14	356 x 356	14 1/2 x 14 1/2	368 x 368	7.8	3.5	1
16 x 16	406 x 406	16 1/2 x 16 1/2	419 x 419	9.6	4.3	1
16 x 20	406 x 508	16 1/2 x 20 1/2	419 x 521	11.4	5.1	1
18 x 18	457 x 457	18 1/2 x 18 1/2	470 x 470	11.4	5.1	1
18 x 24	457 x 610	18 1/2 x 24 1/2	470 x 622	15.0	6.8	1
20 x 24	508 x 610	20 1/2 x 24 1/2	521 x 622	17.0	7.7	1
20 x 30	508 x 762	20 1/2 x 30 1/2	521 x 775	19.0	8.6	2
24 x 24	610 x 610	24 1/2 x 24 1/2	622 x 622	18.3	8.3	1
24 x 30	610 x 762	24 1/2 x 30 1/2	622 x 775	20.0	9.0	2
24 x 36	610 x 914	24 1/2 x 36 1/2	622 x 927	24.5	11.1	2
30 x 30	762 x 762	30 1/2 x 30 1/2	775 x 775	24.5	11.1	4
36 x 36	914 x 914	36 1/2 x 36 1/2	927 x 927	28.0	12.7	4

SERIES CAD-FL-PL

CEILING OR WALL ACCESS DOOR, FLUSH DOOR WITH FRAME

DESCRIPTION

The MIFAB® CAD-FL-PL recessed access door is designed for flush installation in drywall or plaster surfaces. The door panel is flush with the frame. When installed flush with the wall or ceiling, only the door panel is exposed. A 2-3/4" (70) wide metal lath on all sides provides a rigid frame. A mounting bracket is recessed 5/8" (15) from the door. It has a unique white finish.

SPECIFICATIONS

Material CAD-FL-PL Series is 14 gage satincoat steel door and 14 gage satincoat steel frame. The CAD-FL-PL-SS stainless steel Series is 16 gage #304 stainless steel door and frame.

Finish Satincoat steel doors have a primed white finish. Stainless steel doors have a #4 brush satin finish.

Door Flush to frame. Turned back around edges for extra rigidity.

Frame Mounting flange is 1-1/8" (28) wide and recessed 5/8" (15) from the door. A 2-3/4" (70) wide self furring metal lath lines the flange.

Hinge Concealed pivot pins.

Latch Standard - Flush mounted, screwdriver operated cam. Optional - Allen key, cylinder key, or vandal resistant latch. All of MIFAB's cylinder key locks are keyed alike.

Packaging One door per carton.

A-B Door Size
C-D Overall Dimensions - Door Size - Plus 5-1/2" (140)
E-F Wall Opening - Door Size - Plus 1/2" (12)

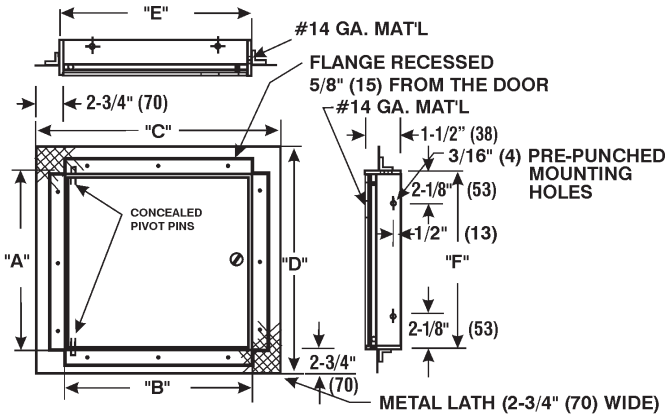

OPTIONAL VARIATIONS:

☐ Allen key lock suffix -A
☐ Cylinder key lock suffix -C
☐ Stainless steel suffix -SS
☐ Vandal resistant suffix -VP

(Dimension) Denotes Millimetres

NOTE: The hinge is always furnished on the "A" or height (longer) dimension, unless otherwise specified.