GC24314 Shown
EB Style

Applications: General purpose fixed speed including conveyors, material handling equipment and packaging machinery.

Features: Three and single-phase motor designs. High strength bronze gearing, hardened and ground worm for quiet operation. High performance low friction, bidirectional motor seals. Factory lubricated for life, no maintenance required. Internal oil expansion bladder allows for multiple mounting positions, without relocating a breather vent.

Input Motor Hp	Output RPM 50/60 Hz	Gear Ratio	Max. Safe Torque In. Lbs.	Catalog Number [a]	List Price	Mult. Sym.	Ap'x. Shpg. Wgt.	Motor Type & Gear Style	Enclosure	Voltage	Notes [b]	Drawing Number
Single Phase												
1/13	7.7/9.3	180:1	175	**GC24314**	602	DS	10	2416C-EB	TENV	115	19,20,78	1
1/20	12.7/16	100:1	100	**GC24312**	602	DS	10	2416C-EB	TENV	115	19,20,78	1
Three Phase												
1/12	1.5	1200:1	175	**GM25021**	637	DS	15	2516M-EB	TENV	208/230-460	20,33	2
	11.3	150:1	125	**GM25016**	637	DS	15	2516M-EB	TENV	208/230-460	20,33	2

(a) Vertical motor below gearhead not recommended.
Avoiding those positions where the high speed oil seal is immersed in oil, will provide greater security against high speed input seal wear.
(b) See notes on inside back flap.

1

24 - EB

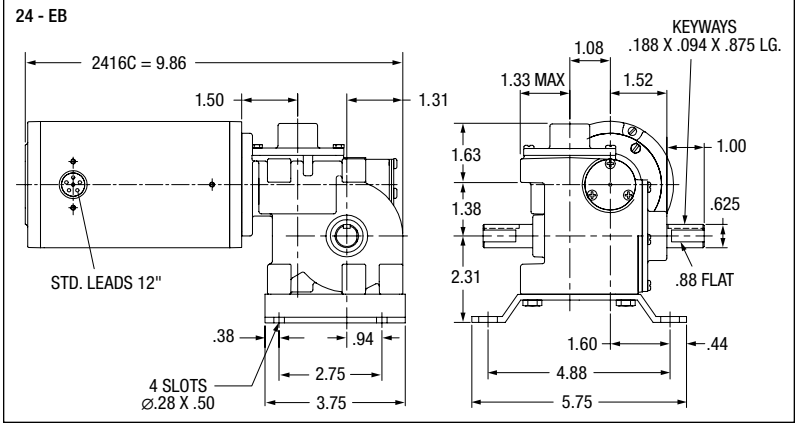

2
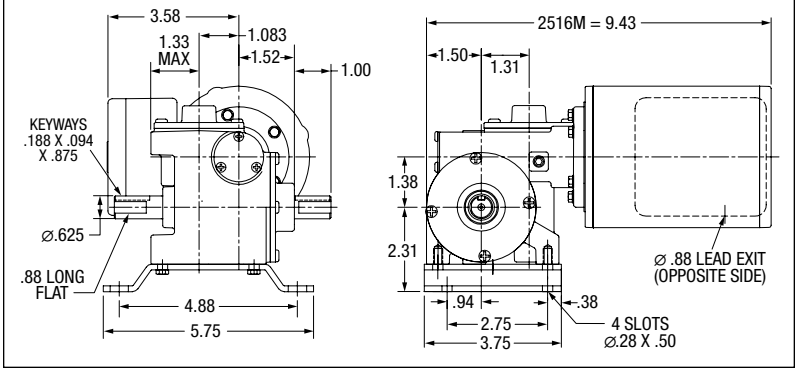
25 - EB