FLEX-900®

Flexible Ball Joints for Water and Wastewater Pipelines

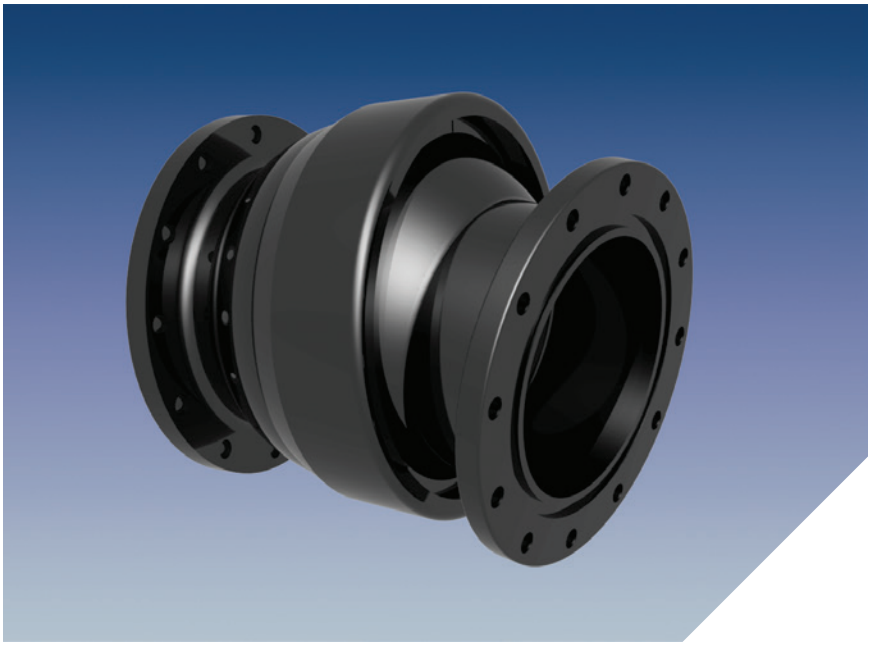

FLEX-912 (912FF0) for 12 inch Flanged fittings or pipe.

Nominal Pipe Size	Series Number: Flange by Flange	Series Number: Mechanical Joint by Restrained Plain End	Pressure Rating PSI
3	903FF0	-	350
4	904FF0	904MP0	350
6	906FF0	906MP0	350
8	908FF0	908MP0	350
10	910FF0	910MP0	350
12	912FF0	912MP0	350
14	914FF0	914MP0	350
16	916FF0	916MP0	350
18	918FF0	918MP0	350
20	920FF0	920MP0	350
24	924FF0	924MP0	350
30	Call for Availability		
36	936FF0	-	250
42	Call for Availability		
48	Call for Availability		
72	Call for Availability		

For applications, end combinations, or pressures other than those shown, please contact EBAA for assistance.

Note Regarding Pressure Ratings: The FLEX-900 has been hydro-tested to its listed rated pressure; however the end connections are subject to the pressure ratings of the applicable joint restraint and the material along with the wall thickness of the pipe.

Features and Applications:

- Sizes 3 in through 48 in and 72 in
  - For use on: Ductile Iron Pipe, Carbon Steel Pipe or C900 PVC Pipe
- Hydrostatically tested prior to shipment
- Rated at 350 PSI on sizes 3 in through 24 in, 250 PSI on sizes 30 in through 48 in and 200 PSI on 72 in
- Constructed of A536 Ductile Iron
- No Periodic Maintenance is Required
- 15 mils of Fusion Bonded Epoxy coating of all 'wetted' parts
- 12° to 20° of deflection depending upon size
- Seals conform to the applicable requirements of ANSI/AWWA C111/A21.11

For use on water or wastewater pipelines subject to hydrostatic pressure and tested in accordance with either AWWA C600 or ASTM D2774.

Sample Specification

Flexible ball joints shall be installed in the locations indicated on the drawings and shall be manufactured of ductile iron conforming to the material properties of ANSI/AWWA C153/A21.53. Flexible joints shall consist of a ball and socket type joint capable of 12° - 15° minimum deflection. Each flexible ball joint shall be pressure tested against its own restraint to 350 PSI for sizes 3 inch through 24 inch and 250 PSI for sizes 30 inch to 48 inch and 200 PSI on 72 inch. MEGALUG® joint restraint shall be provided with each mechanical joint connection. All internal surfaces (wetted parts) shall be lined with a minimum of 15 mils of fusion bonded epoxy conforming to the applicable requirements of ANSI/AWWA C213. Sealing gaskets shall be constructed of EPDM. The coating shall meet ANSI/NSF-61. Exterior surfaces shall be coated with a minimum of 6 mils of fusion bonded epoxy conforming to the applicable requirements of ANSI/AWWA C116/A21.16. All flexible ball joints shall be FLEX-900 as manufactured by EBAA Iron, Inc. or approved equal.

Copyright 2018 © EBAA Iron, Inc. All Rights Reserved.

FLEX-900 Submittal Reference Drawing (3 inch - 12 inch)

EBAA IRON

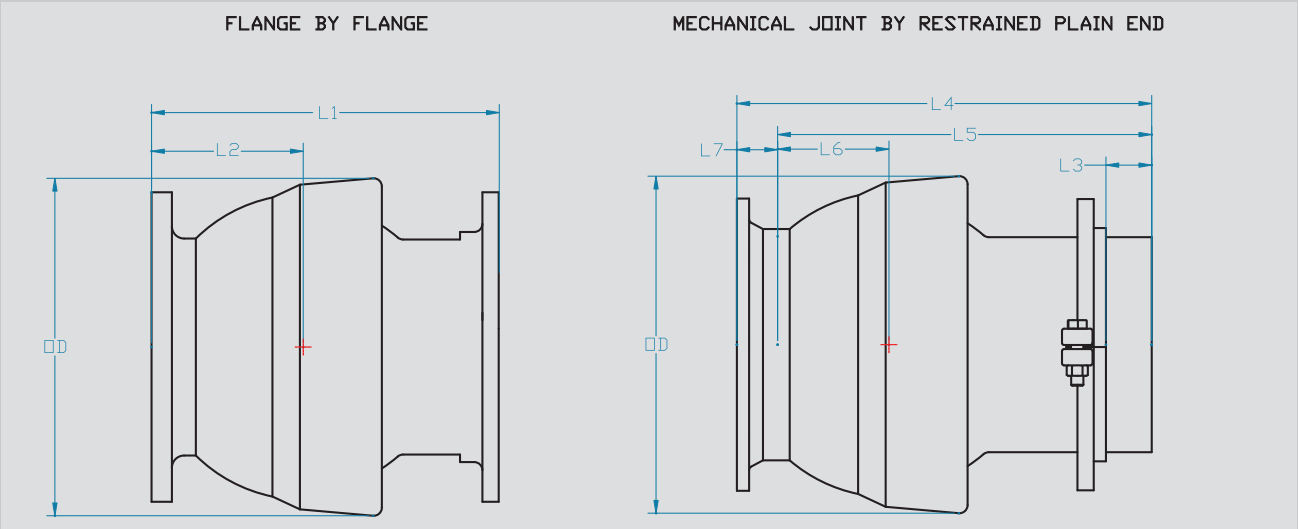

MADE IN USA

Dimensions for FLEX-900 (3 inch through 12 inch)

Nominal Pipe Size	Deflection (Degrees)	L1	L2	L3	L4	L5	L6	L7	ID	OD
3	20	11.4	5.7	-	-	-	-	-	3.2	9.2
4	20	15.0	5.6	1.8	18.1	15.6	3.6	2.5	4.1	13.0
6	20	16.2	6.2	1.7	19.2	16.7	4.2	2.5	6.2	15.0
8	20	16.8	6.9	1.6	19.6	17.1	4.9	2.5	8.3	17.3
10	20	20.5	8.2	1.6	22.9	20.4	6.2	2.5	10.3	22.7
12	20	21.6	9.3	1.6	24.3	21.8	6.8	2.5	12.3	22.7

NOTE: Dimensions are in inches (±1%) and are subject to change with out notice.

FLEX-900 Flange O-ring Groove

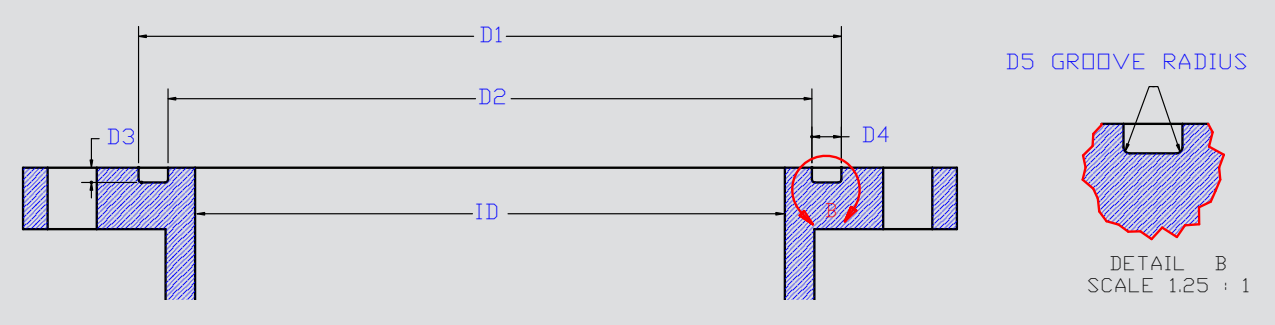

Size	ID*	D1	D2	D3	D4	D5	O-ring Diameter	O-ring Part Number
3	3.280	4.885	4.185	0.175	0.350	0.0625	0.25	983003
4	4.060	5.900	4.700	0.300	0.600	0.0625	0.5	983004
6	6.160	8.00	6.800	0.300	0.600	0.0625	0.5	983006
8	8.270	10.100	8.900	0.300	0.600	0.0625	0.5	983008
10	10.160	12.200	11.000	0.300	0.600	0.0625	0.5	983010
12	12.340	14.300	13.100	0.300	0.600	0.0625	0.5	983012
14	14.260	16.200	15.00	0.300	0.600	0.0625	0.5	983014
16	16.480	18.500	16.900	0.400	0.800	0.1250	0.625	983016
18	18.560	20.700	19.100	0.400	0.800	0.1250	0.625	983018
20	20.520	23.000	21.400	0.400	0.800	0.1250	0.625	983020
24	24.680	27.200	25.600	0.400	0.800	0.1250	0.625	983024
30	30.900	33.500	31.700	0.400	0.900	0.1250	0.75	983030
36	37.040	40.000	38.300	0.400	0.850	0.1250	0.75	983036
42	43.080	46.580	44.080	0.650	1.250	0.1250	N/A	983042
48	49.220	52.720	50.220	0.650	1.250	0.1250	1	983048

FLEX-900 Submittal Reference Drawing (14 inch - 72 inch)

EBAA IRON

MADE IN USA

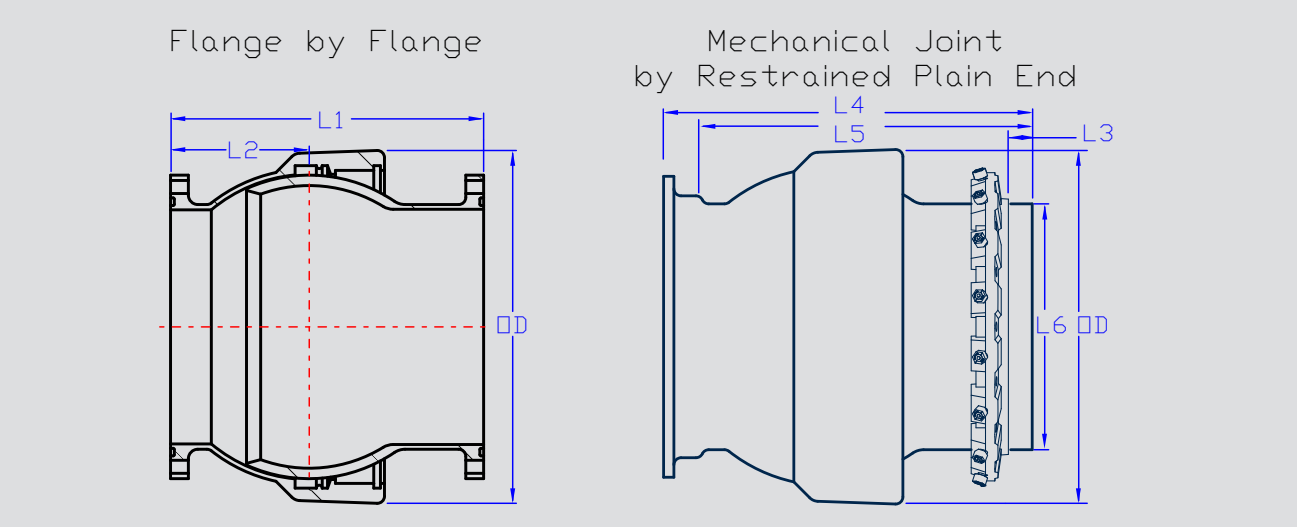

Nominal Pipe Size	Deflection (Degrees)	Dimensions for FLEX-900 (14 inch through 48 inch)							
		L1	L2	L3	L4	L5	L6	ID	OD
14	15	21.5	10.3	3.0	26.3	25.2	15.3	14.4	22.5
16	15	26.5	13.6	2.5	30.3	26.8	17.4	16.5	25.0
18	15	25.4	12.9	3.0	29.7	26.2	19.5	18.6	29.9
20	15	24.6	11.3	2.5	32.9	29.4	21.6	20.6	30.5
24	15	32.9	14.5	2.5	38.7	35.2	25.8	24.8	37.3
30	Call for Availability								
36	15	35.5	17.1	-	-	-	-	37.0	50.3
42	Call for Availability								
48	Call for Availability								
72	Call for Availability								

NOTE: Dimensions are in inches (±1%) and are subject to change without notice.
Mechanical Joint by Restrained Plain End sizes are only available up to 24 inch.

Weights (lbs)		
Nominal Pipe Size	900FF0 (FE x FE)	900MP0 (MJ x RPE)
3	57.89	-
4	86.36	84.60
6	121.04	119.84
8	177.83	162.97
10	267.52	244.82
12	373.26	309.44
14	554.70	621.77
16	596.46	523.01
18	895.46	916.82
20	817.92	966.58
24	1,542.18	1,652.18
30	2,715.00	-
36	3,801.00	-
42	Call	-
48	Call	-
72	Call	-

Important Notes

In order for the FLEX-900 to protect pipeline connections, any load on the pipeline must be transferred to the FLEX-900 by restrained joints. Depending on the piping arrangement and expected movement of the pipeline, adjacent pipeline joints must be restrained to adequately transfer the loads to the FLEX-900.

The flanged outlets are dimensioned according to ANSI/AWWA C110/A21.10 with addition of the O-ring. An O-ring is provided with each flange to provide a proven water tight seal to a minimum of 350 PSI.

Mechanical joint connection conform to the dimensional requirements of either ANSI/AWWA C110/A21.10 or ANSI/AWWA C153/A21.53 depending on the size.

Installation Instructions

1. Remove protective end covers.
2. Remove polyethylene sleeve and other materials.
3. Check interior, remove dirt and foreign material from interior and end connections.
4. For buried applications install polyethylene sleeve per ANSI/AWWA C105/A21.5 recommendations.
5. Assembly of flange joint:
   a. Place O-ring in groove.
   b. Place FLEX-900 flange against adjoining flange, install and hand tighten bolts.
   c. Check O-ring for proper placement.
   d. Tighten flange bolts.
6. Install mechanical joint FLEX-900 end connections using the EBAA Iron MEGALUG® Mechanical Joint Restraint suitable for adjacent pipe material. MEGALUG 1100 should be used on ductile iron pipe. MEGALUG 2000PV is to be used on PVC pipe. Assembly instructions for each of these restraints products are included with the restraint device.
7. Assembly of restrained plain end:
   a. Lubricate and install EBAA-Seal™ Improved Mechanical Joint Gasket provided over plain end per ANSI/AWWA C600.
   b. Insert plain end into adjacent mechanical joint bell.
   c. Install and hand tighten T-bolts.
   d. Tighten T-bolts per AWWA recommendations.
8. Touch up exterior coating as necessary.

	Protection From			
FLEX-TEND® Family	Shear Plain	Bending Moments w/Expansion	Bending Moments No Expansion	Expansion (Axial)
FLEX-TEND Double Ball	Yes	Yes	Yes	Yes
FLEX-TEND Single Ball	No	Yes	Yes	Yes
FLEX-900	No	No	Yes	No
EX-TEND	No	No	No	Yes

EBAA IRON Sales, Inc.
P.O. Box 857, Eastland, TX 76448
Tel: (254) 629-1731
Fax: (254) 629-8931
(800) 433-1716 within US and Canada
contact@ebaa.com
www.ebaa.com

Members of...
AMERICAN FOUNDRY SOCIETY