Discovery Marine

Sounder Visual Indicator Base

Product Overview

Product	**Marine Sounder Visual Indicator Base**
Part No.	**45681-394MAR**
Digital Communication	**XP95, Discovery and CoreProtocol® compatible**

Approvals

Product Information

The Discovery Marine Sounder Visual Indicator Base is a multifunctional device made up of a mounting base for Discovery fire detectors, a sounder, a visual indicator and a short-circuit isolator.

The Discovery Marine Sounder Visual Indicator Base is used to provide audible and visual warning of fire and is controlled by the appropriate fire control panel by means of the full Discovery protocol, the particular features of which should be requested from the panel manufacturer.

- 15 evacuation tones and 15 secondary or alert tones
- Seven volume levels
- Software defined group addressing
- Alarm switching by individual device, by group or all devices on the loop
- Independent control of sounder and visual indicator
- Set-up and testing of devices at point of installation
- Isolator status information
- Unique acoustic self-test

Technical Data

All data is supplied subject to change without notice. Specifications are typical at 24V, 23°C and 50% RH unless otherwise stated.

Operating voltage	*17 - 28 V dc polarity sensitive*
Protocol pulses	*5 - 9 V*
Digital communication	*XP95, Discovery and CoreProtocol compatible*
Current consumption at 24 V dc	
Quiescent current	*450 µA*
Power-up surge current	*1.2 mA*
Device operated at maximum volume	*8 mA*
Maximum sound output at 90°	*90 ± 3 dB(A)*
Operating temperature	*-20 °C to + 60 °C*
Storage temperature	*-30 °C to + 70 °C*
Humidity (no condensation or icing)	*0% to 95% RH*
IP Rating	*designed to IP21D*
Standards ans approvals	*MED, LR. ABS and VNIIPO*
Dimensions	*115 mm diameter x 38 mm height*
Weight	*168 g*
Materials	*Housing: White polycarbonate* *Terminals: Nickel plated stainless steel*

Operation

The Discovery Marine Sounder Visual Indicator Base can be used either with a detector fitted or with a cap fitted for operation as a stand-alone alarm device.

The Discovery Marine Sounder Visual Indicator Base normally switches both sounder and visual indicator to provide an alert or evacuation signal. The sounder and visual indicator of the Discovery Marine Sounder Visual Indicator Base can, however, be switched independently of each other by the control panel.

Detectors and sounder visual indicators are installed in many different environments.

The sounder is set during commissioning to one of seven levels of sound, the highest being nominally 90 dB(A).

At 60 dB(A) the lowest level is outside of the standard EN 54. It has been included to provide a very local warning for the use of personnel in particular environments, such as nurse stations in hospitals. For full details of Sound Pressure Levels, refer to PP2203 - Sound Pressure Levels, available at www.apollo.co.uk

When configuring the Discovery Marine Sounder Visual Indicator Base the adjustment of volume can be configured at the point of installation.

36 Brookside Road, Havant
Hampshire, PO9 1JR, UK.
Tel: +44 (0)23 9249 2412
Fax: +44 (0)23 9249 2754
Email: sales@apollo-fire.com
Web: www.apollo-fire.co.uk

A HALMA COMPANY
© Apollo Fire Detectors Limited 2017

The commissioning engineer simply sets the control panel to 'Setup' and then walks from one device to the next to set the required volume using a magnetic wand, Part No. 29650-001. When all the devices have been set the control panel is used to register all the individual volume settings.

The Discovery Marine Sounder Visual Indicator Base offers a choice of 15 evacuation tones, including the standard Apollo evacuation tone. One of these tones is selected during commissioning in order to suit local regulations or customs.

The tones include those required by Dutch, Swedish, German, Australian, New Zealand and North American standards as well as the UK.

Whichever evacuation tones is selected there is a secondary tone which may be used for alerting or warning of a possible evacuation.

In many installations a fire alarm must be raised by switching more than one sounder visual indicator to alert or alarm simultaneously. This is achieved with Sounder Visual Indicator Bases by assigning devices to groups on commissioning, with the group information being stored in each device. One command will then switch on all devices in the group.

EMC Directive 2014/30/EU

The Discovery Marine Sounder Visual Indicator Base complies with the essential requirements of the EMC Directive 2014/30/EU, provided that it is used as described in this data sheet.

A copy of the Declaration of Conformity is available from the Apollo website: www.apollo-fire.co.uk

Conformity of the Discovery Marine Sounder Visual Indicator Base with the EMC Directive, does not confer compliance with the directive on any apparatus or systems connected to them.

Construction Products Regulation 305/2011/EU

The Discovery Marine Sounder Visual Indicator Base complies with the essential requirements of the Construction Products Regulation 305/2011/EU.

A copy of the Declaration of Performance is available from the Apollo website: www.apollo-fire.co.uk

Marine Equipment Directive 2014/90/EU

The Discovery Marine Sounder Visual Indicator Base complies with the essential requirements of the Marine Equipment Directive 2014/90/EU.
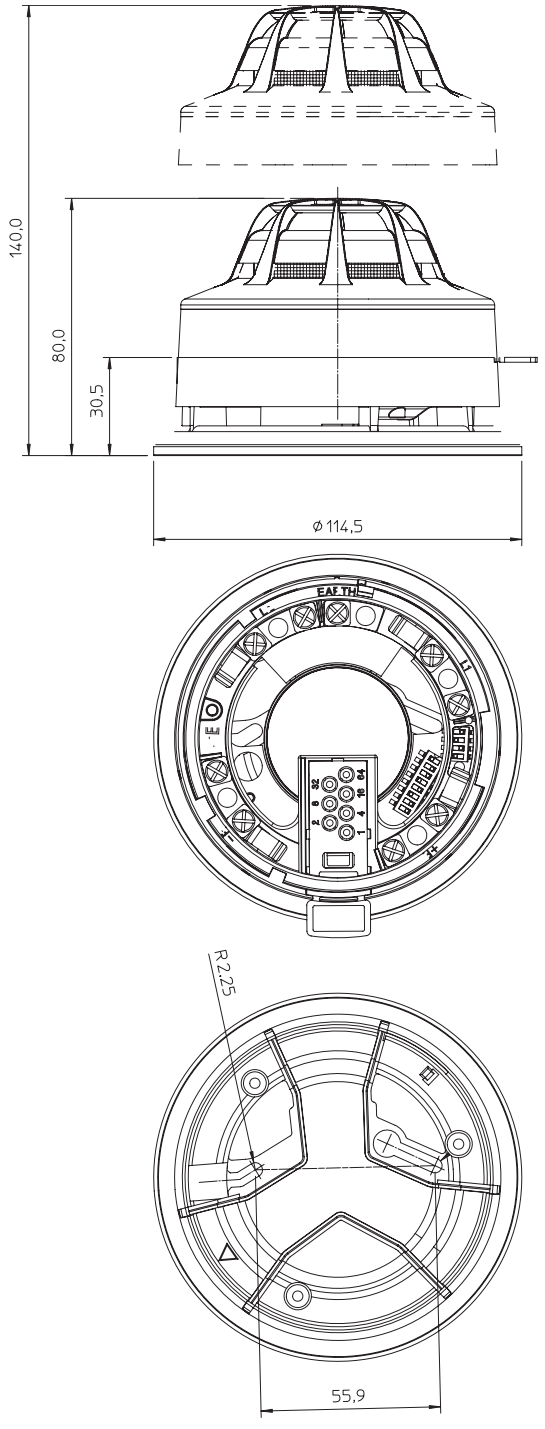
Discovery Marine Sounder Visual Indicator Base dimensional drawing