ANTE UP INFLATABLE EMERGENCY ANTEROOM

The new ANTE UP® emergency anteroom from Abatement Technologies provides users with an easier to use alternative to erecting "frame and shroud" anteroom modules in the corridor. This unique product enables facilities to quickly add temporary anterooms to rooms wherever infectious, surge-capacity patients are isolated. ANTE UP can be placed within the doorway to minimize corridor obstruction, or placed in the corridor, adjacent to the doorway.

EXCEPTIONAL PORTABILITY

- Fits in a soft carrying bag
- Weighs just 40 lbs.

FAST SETUP

- Deploys in less than 5 minutes using the 110V inflator/deflator (included)
- Self-seals in a doorway or quick setup outside a doorway

VERSATILE

- Fits into or adjacent to standard 80" tall, 46" to 49" wide doorways
- Expandable to fit double doors up to 100" wide

MINIMAL DISRUPTION

- Takes up only 10" of corridor space when mounted within the door opening
- Full-width door opening at gurney height

RELIABLE

- Five-year manufacturers warranty

FIRE-RATED FRAME FABRIC

- CA Bulletin 117 Section C
- NFPA 702
- OSHA CFR 16, Part 1610

BI-DIRECTIONAL CAPABILITY

- Use with an in-room HEPA-CARE system for ideal "clean to dirty" airflow, or with a portable air scrubber in the corridor
- Left/right ports fit 8" or 10" exhausts

1. 10" exhaust / intake ports for HEPA filtration device (HFD)
2. Zippered half-C entry / exit doors (2)
3. Zippered pass-through opening
4. Clear view windows with covers on corridor and room sides
5. Top load clear-view file pocket
6. Extended floor
7. Tape flap

ABATEMENT TECHNOLOGIES®
World Class Indoor Air Quality Products

United States: 800.634.9091
Canada: 800.827.6443
www.abatement.com
Phone 678.889.4200 • Fax 678.889.4201

ANTE UP FEATURES

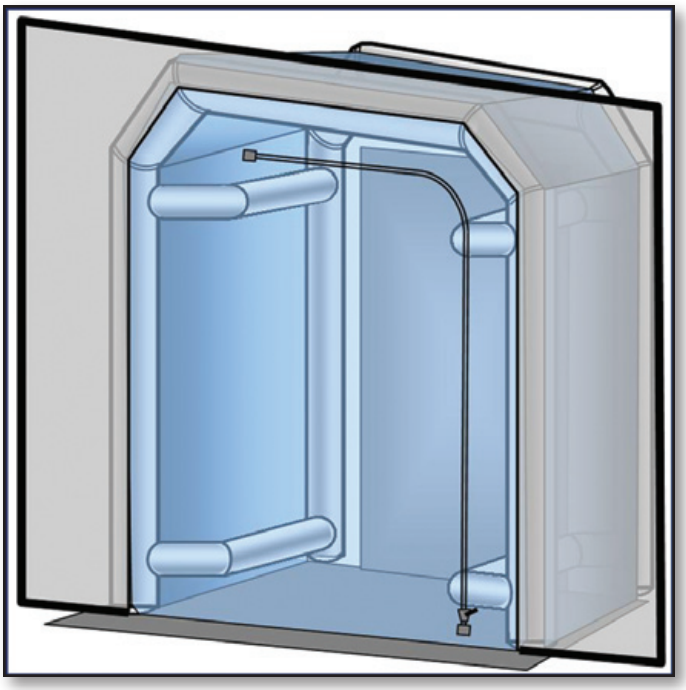

Tape Flap View (ANTE UP Mounted in the Corridor)

For optimum performance, use the ANTE UP module in combination with HEPA-CARE® in-room HEPA filtration systems to create "clean to dirty" directional airflow.

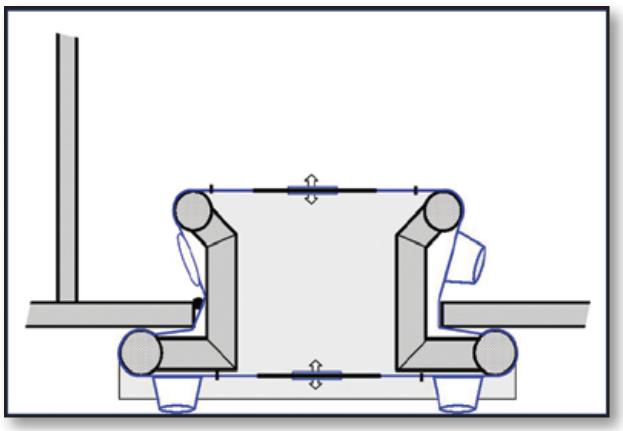

Cross Section View
(ANTE UP Mounted in the Door Opening)

ABATEMENT TECHNOLOGIES®
World Class Indoor Air Quality Products

United States: 800.634.9091
Canada: 800.827.6443
www.abatement.com
Phone 678.889.4200 • Fax 678.889.4201

©2007, Abatement Technologies, Inc. All Rights Reserved. No reproduction of any portion of this advertisement is permitted without the express written permission of Abatement Technologies, Inc. All illustrations and specifications contained in this advertisement are based on the latest product information available at the time of printing. Abatement Technologies, Inc. reserves the right to (1) make changes at any time, without notice, to product designs, specifications, materials and colors; (2) to introduce new models to the marketplace; and (3) discontinue products as it sees fit. 05-032607 Anteup