TCF
Twin City Fan

INDUSTRIAL PROCESS AND
COMMERCIAL VENTILATION SYSTEMS

UPBLAST & HOODED TUBEAXIAL ROOF VENTILATORS

TUB | TUD | TUBSH | THB | THD | THBF | THDF

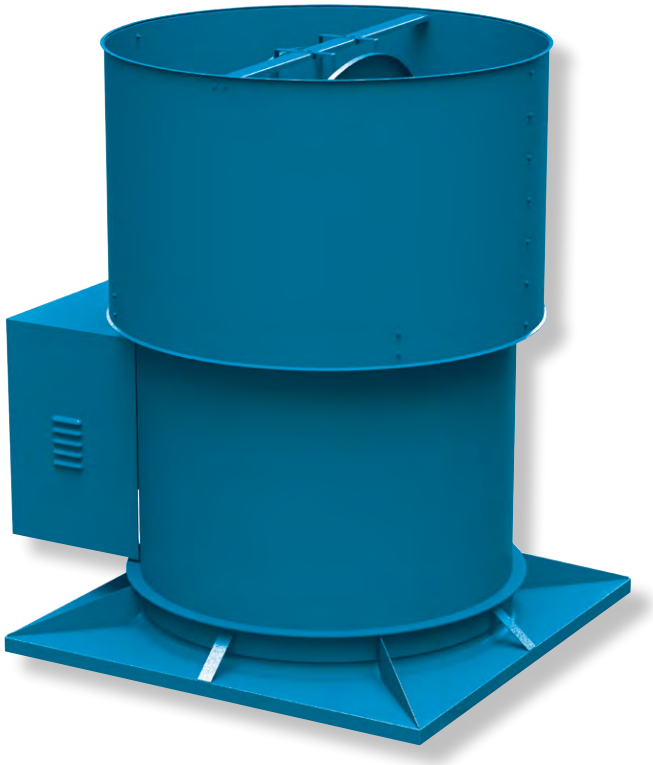

CATALOG 4850 | DECEMBER 2011

WWW.TCF.COM

TUB / TUD / TUBSH / THB / THBF / THD / THDF
Upblast & Hooded Tubeaxial Roof Ventilators

Twin City Fan & Blower Tubeaxial Roof Ventilators provide cost effective, general-purpose ventilation of commercial buildings. Belt and direct drive models are available with adjustable pitch, cast aluminum or fixed pitch, fabricated steel propellers to meet specific application requirements.

- Direct drive sizes 14" to 48"
- Belt drive sizes 14" to 60"
- Capacities from 730 CFM to 72,200 CFM
- Static pressure to 1½" w.g.

Type TUB and TUD (Upblast)

Upblast models TUB and TUD include a heavy-duty, galvanized steel stack cap with butterfly dampers to discharge air upward and prevent recirculation into the building. A splash guard located over the damper pivot area protects against rain entry.

Type TUBSH (Smoke & Heat Removal)

Smoke and heat removal model TUBSH is designed to remove smoke from buildings in the event of a fire. The unit features fusible link damper springs which force dampers to open when the fusible links melt at 165°F.

The TUBSH is designed to meet the time/temperature standards (500°F for 4 hours, 1000°F for 15 minutes) and snow load test for dampers set forth by UL, IRI, and SBCCI.

Type THB and THD (Hooded)

Hooded models THB and THD feature a removable galvanized steel hood for cleaning purposes and are available in exhaust or supply configurations. Hoods on fan sizes 48, 54 and 60 ship knocked down and require field assembly.

Type THBF and THDF (Hooded Filtered Supply)

Hooded filtered supply models THDF (direct drive) and THBF (belt driven) feature a removable galvanized steel hood for cleaning and servicing the fan as well as 2" washable aluminum mesh filters. Hoods on fan sizes 42, 48, 54 and 60 ship knocked down and require field assembly.

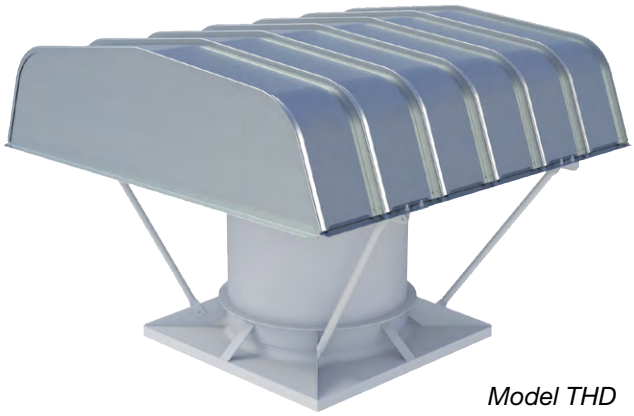

Model THD

Construction Features

- Painted steel windband on stack cap.
- Aluminum (sizes 14" to 36") and galvanized steel (sizes 42" to 60") butterfly dampers on stack cap.
- Hooded design construction of galvanized steel.
- Heavy-duty, painted steel curb base incudes venturi inlet for efficient airflow and prepunched mounting holes for easy installation.
- Structural, galvanized steel frame provides strong support and mounting base for motor and drive.
- Motors are ball bearing type, available in ODP, TE and EXP with a variety of standard voltages.
- Motor cover standard on models TUB, TUBSH, THB and THBF.
- Extended lube lines are standard on belt driven fans.

All models are cULus 705 listed, for electrical, File No. E158680.

Model TUBSH is UL listed for Smoke Control Systems, 500°F for 4 hours and 1000°F for 15 minutes.

Twin City Fan & Blower, a Twin City Fan Company, certifies that the TUB/TUD/TUBSH Series shown herein is licensed to bear the AMCA Seal. The Ratings shown are based on tests and procedures performed in accordance with AMCA Publication 211 and AMCA Publication 311 and comply with the AMCA Certified Ratings Program.

Fan Efficiency Grade (FEG) certification applies to Model TUB Sizes 24E4, 24E8, 24Z5, 30E4, 30E8, 30Z5, 36E4, 36E8, 36Z5, 42E4, 42E8, 42Z5, 48E4, 48E8, 48Z5, 54C3, 54C6, 54Z5, 60C3, 60C6 and 60Z5, Model TUBSH Sizes 24Z5, 30Z5, 36Z5, 42Z5, 48Z5, 54Z5 and 60Z5 and Model TUD sizes 21E4, 24E4, 24E8, 30E4, 30E8, 36E4, 36E8, 42E4, 42E8, 48E4 and 48E8.

Accessories

- Bird screen (TUB/TUD only)
- Fusible link damper springs (TUB/TUD/TUBSH only)
- Magnetic damper latches (TUB/TUD/TUBSH only)
- Access door, bolted
- Prefabricated roof curbs
- Disconnect switches
- Externally mounted conduit box (TUD/THD/THDF only)
- Special coatings
- Shaft seal (TUB/THB/THBF only)
- Spark 'B' construction (TUB/THB/THBF only)
- Backdraft damper, gravity or motorized (THB/THD/THBF/THDF only)
- Curb extension with damper shelf (THB/THD/THBF/THDF only)
- Filtered supply fan construction (THBF/THDF only)

Engineering Data

Material Specifications

FAN SIZE	GAUGES							SHAFT SIZE (IN.)	APPROX. SHIP WT. (LB)						
	WIND BAND	CURB CAP	HOOD	PROPELLERS					TUB	TUD	TUBSH	THB	THD	THBF	THDF
				E	C	Z									
						HUB	BLADE								
14	20	16	22					3/4	74	67	N/A	123	116	N/A	N/A
16	20	16	22					3/4	132	92	N/A	177	137	N/A	N/A
18	20	16	22					3/4	169	133	N/A	222	186	N/A	N/A
21	20	16	22					3/4	222	194	N/A	288	260	334	305
24	20	16	22	DIE CAST ALUM.		12	14	1	292	213	292	421	342	466	389
30	20	16	22			12	14	1	419	369	419	558	508	701	601
36	20	16	22			12	12	1 3/16	589	517	589	783	711	857	785
42	20	16	22			10	10	1 7/16	724	639	724	884	799	955	868
48	20	14	22			10	10	1 7/16	1077	924	1077	1252	1099	1365	1210
54	18	14	22		CAST	7	10	1 7/16	1345	N/A	1345	1539	N/A	1691	N/A
60	18	14	22		ALUM.	7	10	1 11/16	1609	N/A	1609	1929	N/A	2095	N/A

Model Nomenclature

TUB - E - 24 - E - 4 - 16

Model
- TUB = Upblast Tubeaxial Roof Ventilator, Belt Driven
- TUD = Upblast Tubeaxial Roof Ventilator, Direct Drive
- TUBSH = Smoke & Heat Removal Ventilator, Belt Driven
- THB = Hooded Tubeaxial Roof Ventilator, Belt Driven
- THD = Hooded Tubeaxial Roof Ventilator, Direct Drive
- THBF = Hooded Filtered Supply Tubeaxial Roof Ventilator, Belt Driven
- THDF = Hooded Filtered Supply Tubeaxial Roof Ventilator, Direct Driven

E = Exhaust, S = Supply (THB/THD Only)

Fan Size

Propeller Type
- Z = Fabricated Steel, Fixed Pitch (5-Bladed)
- E = Die Cast Aluminum, Adjustable Pitch (4- and 8-Bladed)
- C = Cast Aluminum, Adjustable Pitch (4- and 6-Bladed)
- B = Cast Aluminum, Adjustable Pitch (4-, 5- and 6-Bladed)

No. of Blades

Propeller Blade Angle

Propellers

Twin City Fan & Blower Tubeaxial Roof Ventilators are available with either fixed pitch fabricated steel or adjustable pitch cast aluminum propellers. Each propeller type is designed for a wide variety of commercial market applications with static pressure capabilities from 0" to 1½". The TUBSH is available only with the fabricated steel propeller. Regardless of the application requirement, Twin City Fan & Blower propellers offer the right choice.

Propeller Availability

FAN SIZE	TUB/THB	THBF	TUD/THD	THDF	TUBSH
14	E	—	E	—	—
16	E	—	E	—	—
18	E	—	E	—	—
21	E	E	E	E	—
24	E/Z	E/Z	E	E	Z
30	E/Z	E/Z	E	E	Z
36	E/Z	E/Z	E	E	Z
42	E/Z	E/Z	E	E	Z
48	E/Z	E/Z	E	E	Z
54	C/Z	C/Z	—	—	Z
60	C/Z	C/Z	—	—	Z

"E" Die Cast Aluminum Propeller

The "E" series features an adjustable pitch die cast aluminum propeller available in 4 and 8 blade designs. Blade angles are factory set and mounted in a die cast aluminum hub. "E" propellers are available in 14" through 48" diameters.

"C" Cast Aluminum Propellers

The "C" series is a cast aluminum propeller available in 4 and 6 blade designs, and is available in 54" and 60" diameters only. Blade angles are factory set and mounted in a cast aluminum hub.

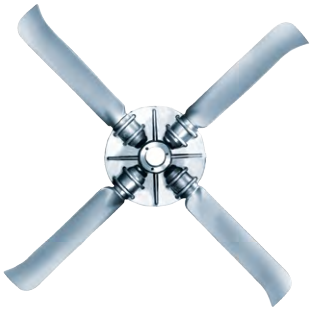

"Z" Fabricated Steel Propeller

The "Z" series features a fixed pitch, fabricated steel, 5-bladed propeller. Steel blades are continuously welded to a heavy gauge hub at the customer's selected blade angle. "Z" propellers are available in 24" through 60" diameters.

Performance Data – Belt Driven

TUB – Die Cast Aluminum Propeller

SIZE	NO. OF BLADES	PROP	MOTOR HP	FAN RPM	MAX. BHP	LwiA	STATIC PRESSURE (IN. W.G.) 0.000 CFM	0.125 CFM	0.250 CFM	0.375 CFM	0.500 CFM	0.625 CFM	0.750 CFM	0.875 CFM	1.000 CFM	1.250 CFM	1.500 CFM	FAN EFF. GRADE
14	Outlet Area: 1.108 ft²																	
	4 BLADES	TUB-14E342	1/4	1681	0.25	79	1713	1501										N/A
		TUB-14E428	1/4	1770	0.25	79	1712	1541	1289									
		TUB-14E420	1/4	1982	0.25	81	1689	1546	1385	1175								
		TUB-14E432	1/3	1850	0.33	81	1885	1701										
		TUB-14E428	1/3	1945	0.33	82	1881	1729	1537									
		TUB-14E420	1/3	2182	0.33	84	1859	1731	1590	1425								
		TUB-14E432	1/2	2118	0.50	85	2158	2005	1789									
		TUB-14E428	1/2	2228	0.50	86	2154	2025	1874	1672								
		TUB-14E420	1/2	2498	0.50	88	2128	2018	1898	1770	1621	1427						
		TUB-14E432	3/4	2425	0.75	89	2471	2341	2180	1940								
		TUB-14E428	3/4	2550	0.75	89	2466	2355	2231	2088	1897							
		TUB-14E420	3/4	2860	0.75	91	2437	2341	2239	2132	2018	1890	1740					
	8 BLADES	TUB-14E832	1/4	1543	0.25	79	1654											N/A
		TUB-14E832	1/3	1698	0.33	82	1820	1534										
		TUB-14E832	1/2	1944	0.50	85	2084	1880										
		TUB-14E832	3/4	2225	0.75	89	2385	2220										
16	Outlet Area: 1.44 ft²																	
	4 BLADES	TUB-16E432	1/4	1405	0.25	77	2210	1912										N/A
		TUB-16E428	1/4	1486	0.25	79	2201	1947	1564									
		TUB-16E420	1/4	1685	0.25	81	2138	1914	1663									
		TUB-16E432	1/3	1543	0.33	79	2427	2165										
		TUB-16E428	1/3	1636	0.33	81	2423	2197	1911									
		TUB-16E420	1/3	1854	0.33	84	2353	2150	1937	1645								
		TUB-16E432	1/2	1771	0.50	84	2786	2566	2280									
		TUB-16E428	1/2	1873	0.50	86	2774	2581	2358	2055								
		TUB-16E420	1/2	2121	0.50	88	2692	2516	2333	2134	1859							
		TUB-16E432	3/4	2027	0.75	88	3188	3001	2779	2461								
		TUB-16E428	3/4	2144	0.75	89	3175	3009	2825	2615	2327							
		TUB-16E420	3/4	2430	0.75	92	3084	2931	2772	2612	2432	2198	1886					
		TUB-16E432	1	2232	1.00	91	3511	3343	3151	2922								
		TUB-16E428	1	2359	1.00	92	3494	3344	3181	3003	2795	2500						
		TUB-16E420	1	2675	1.00	95	3395	3256	3114	2968	2820	2648	2433	2162				
	8 BLADES	TUB-16E832	1/4	1263	0.25	77	2157	1830										N/A
		TUB-16E832	1/3	1390	0.33	79	2374	2096										
		TUB-16E832	1/2	1593	0.50	82	2721	2492										
		TUB-16E832	3/4	1822	0.75	86	3112	2920	2665									
		TUB-16E832	1	2005	1.00	89	3425	3253	3043	2735								
18	Outlet Area: 1.817 ft²																	
	4 BLADES	TUB-18E432	1/4	1196	0.25	75	2748	2346										N/A
		TUB-18E428	1/4	1272	0.25	75	2734	2374										
		TUB-18E420	1/4	1470	0.25	81	2652	2327	1938									
		TUB-18E432	1/3	1316	0.33	77	3024	2666										
		TUB-18E428	1/3	1397	0.33	79	3002	2679	2284									
		TUB-18E420	1/3	1617	0.33	84	2917	2621	2315									
		TUB-18E432	1/2	1508	0.50	82	3465	3160	2792									
		TUB-18E428	1/2	1602	0.50	83	3443	3167	2856									
		TUB-18E420	1/2	1852	0.50	89	3341	3083	2828	2514								
		TUB-18E432	3/4	1725	0.75	86	3964	3703	3409									
		TUB-18E428	3/4	1833	0.75	88	3939	3701	3441	3147								
		TUB-18E420	3/4	2120	0.75	93	3824	3600	3374	3150	2854							
		TUB-18E432	1	1900	1.00	90	4366	4131	3871	3581								
		TUB-18E428	1	2018	1.00	91	4337	4122	3891	3643	3354							
		TUB-18E420	1	2333	1.00	96	4209	4005	3799	3598	3382	3088						
		TUB-18E432	1½	2175	1.50	94	4998	4795	4576	4342	4079							
		TUB-18E428	1½	2311	1.50	95	4966	4781	4584	4377	4157	3907						
		TUB-18E420	1½	2673	1.50	99	4822	4644	4465	4285	4111	3927	3697					
	8 BLADES	TUB-18E832	1/4	1056	0.25	75	2693	2322										N/A
		TUB-18E832	1/3	1162	0.33	77	2963	2636										
		TUB-18E832	1/2	1331	0.50	80	3394	3119										
		TUB-18E832	3/4	1523	0.75	84	3884	3649	3373									
		TUB-18E832	1	1676	1.00	87	4274	4064	3822	3542								
		TUB-18E832	1½	1920	1.50	91	4896	4715	4516	4293	4038							

NOTES:
1. Performance certified is for installation Type A: Free inlet, free outlet.
2. Power rating (BHP) does not include transmission losses.
3. Performance ratings do not include the effects of appurtenances (accessories).
4. The sound power ratings shown are in decibels, referred to 10^{-12} watts calculated per AMCA Standard 301.
5. Values shown are for inlet LwiA sound power levels for installation Type A: Free inlet, free outlet. Ratings do not include the effects of end correction.
6. Sound power values shown are at the peak cataloged pressure for each RPM.

Performance Data – Belt Driven

TUB – Die Cast Aluminum Propeller

SIZE	NO. OF BLADES	PROP	MOTOR HP	FAN RPM	MAX. BHP	LwiA	STATIC PRESSURE (IN. W.G.) 0.000 CFM	0.125 CFM	0.250 CFM	0.375 CFM	0.500 CFM	0.625 CFM	0.750 CFM	0.875 CFM	1.000 CFM	1.250 CFM	1.500 CFM	FAN EFF. GRADE
21	Outlet Area: 2.463 ft²																	
	4 BLADES	TUB-21E432	1/4	995	0.25	75	3462	2854										N/A
		TUB-21E428	1/4	1064	0.25	75	3469	2903										
		TUB-21E420	1/4	1243	0.25	80	3362	2879	2257									
		TUB-21E432	1/3	1096	0.33	77	3813	3288										
		TUB-21E428	1/3	1170	0.33	78	3814	3308										
		TUB-21E420	1/3	1368	0.33	82	3700	3260	2770									
		TUB-21E432	1/2	1255	0.50	81	4366	3928	3313									
		TUB-21E428	1/2	1340	0.50	81	4368	3934	3439									
		TUB-21E420	1/2	1567	0.50	86	4239	3855	3469	2959								
		TUB-21E432	3/4	1436	0.75	84	4996	4625	4164									
		TUB-21E428	3/4	1534	0.75	86	5001	4627	4219	3754								
		TUB-21E420	3/4	1793	0.75	90	4850	4515	4180	3822	3347							
		TUB-21E432	1	1581	1.00	87	5500	5169	4778	4278								
		TUB-21E428	1	1688	1.00	89	5503	5165	4803	4406	3945							
		TUB-21E420	1	1974	1.00	93	5340	5036	4729	4426	4066	3607						
		TUB-21E432	1½	1811	1.50	91	6300	6016	5697	5326	4868							
		TUB-21E428	1½	1935	1.50	93	6308	6016	5708	5383	5029	4641						
		TUB-21E420	1½	2261	1.50	97	6116	5851	5584	5318	5051	4743	4371	3917				
		TUB-21E432	2	1992	2.00	94	6930	6674	6393	6080	5717	5278						
		TUB-21E428	2	2126	2.00	95	6931	6666	6390	6101	5797	5467	5113					
		TUB-21E420	2	2488	2.00	99	6730	6489	6247	6003	5765	5518	5236	4905	4522			
	8 BLADES	TUB-21E832	1/4	866	0.25	73	3377	2860										N/A
		TUB-21E832	1/3	952	0.33	76	3713	3251										
		TUB-21E832	1/2	1091	0.50	79	4255	3862										
		TUB-21E832	3/4	1249	0.75	83	4871	4536	4157									
		TUB-21E832	1	1375	1.00	86	5362	5062	4726	4336								
		TUB-21E832	1½	1575	1.50	90	6142	5883	5601	5299	4938							
		TUB-21E832	2	1732	2.00	91	6755	6521	6270	6000	5719							
24	Outlet Area: 3.207 ft²																	
	4 BLADES	TUB-24E432	1/3	939	0.33	76	4700	3950										FEG 50
		TUB-24E424	1/3	1085	0.33	80	4590	4024	3191									
		TUB-24E416	1/3	1315	0.33	86	4316	3825	3193	2408								
		TUB-24E432	1/2	1075	0.50	81	5380	4770	3905									
		TUB-24E424	1/2	1247	0.50	84	5275	4804	4173	3316								
		TUB-24E416	1/2	1510	0.50	89	4956	4539	4046	3430	2730							
		TUB-24E432	3/4	1230	0.75	83	6156	5644	4957									
		TUB-24E424	3/4	1426	0.75	88	6032	5632	5140	4523	3718							
		TUB-24E416	3/4	1728	0.75	93	5671	5314	4911	4442	3884	3284						
		TUB-24E432	1	1354	1.00	87	6777	6321	5749	5056								
		TUB-24E424	1	1570	1.00	92	6641	6283	5866	5349	4747	3953						
		TUB-24E416	1	1902	1.00	95	6242	5920	5567	5170	4712	4195	3649					
		TUB-24E432	1½	1551	1.50	90	7763	7373	6923	6361	5750							
		TUB-24E424	1½	1797	1.50	94	7601	7293	6951	6555	6088	5570	4946					
		TUB-24E416	1½	2178	1.50	99	7148	6870	6572	6250	5896	5501	5056	4599	4110			
		TUB-24E432	2	1705	1.99	93	8534	8183	7791	7329	6783	6215						
		TUB-24E424	2	1978	2.00	95	8367	8090	7788	7454	7067	6633	6160	5612				
		TUB-24E416	2	2395	2.00	101	7860	7609	7343	7060	6757	6428	6067	5665	5252	4362		
		TUB-24E432	3	1953	3.00	96	9775	9472	9145	8783	8366	7891	7412					
		TUB-24E424	3	2263	3.00	100	9572	9332	9077	8803	8505	8169	7799	7408	6983	5946		
		TUB-24E416	3	2744	3.00	104	9006	8788	8560	8323	8073	7810	7530	7233	6909	6199	5456	
	8 BLADES	TUB-24E832	1/3	798	0.33	74	4513	3893										FEG 50
		TUB-24E832	1/2	913	0.49	79	5164	4628	3937									
		TUB-24E832	3/4	1046	0.75	82	5916	5456	4958									
		TUB-24E832	1	1152	1.00	85	6516	6102	5657	5121								
		TUB-24E832	1½	1319	1.49	88	7460	7102	6720	6327	5818							
		TUB-24E832	2	1451	2.00	91	8207	7883	7542	7187	6817	6294						
		TUB-24E832	3	1661	3.00	94	9395	9114	8822	8517	8206	7887	7500					

NOTES:
1. Performance certified is for installation Type A: Free inlet, free outlet.
2. Power rating (BHP) does not include transmission losses.
3. Performance ratings do not include the effects of appurtenances (accessories).
4. The sound power ratings shown are in decibels, referred to 10^{-12} watts calculated per AMCA Standard 301.
5. Values shown are for inlet LwiA sound power levels for installation Type A: Free inlet, free outlet. Ratings do not include the effects of end correction.
6. Sound power values shown are at the peak cataloged pressure for each RPM.

Performance Data – Belt Driven

TUB – Die Cast Aluminum Propeller

SIZE	NO. OF BLADES	PROP	MOTOR HP	FAN RPM	MAX. BHP	LwiA	STATIC PRESSURE (IN. W.G.) 0.000 CFM	0.125 CFM	0.250 CFM	0.375 CFM	0.500 CFM	0.625 CFM	0.750 CFM	0.875 CFM	1.000 CFM	1.250 CFM	1.500 CFM	FAN EFF. GRADE
30	Outlet Area: 5.034 ft²																	
	4 BLADES	TUB-30E432	1/2	698	0.50	75	7365	6186										FEG 60
		TUB-30E424	1/2	801	0.50	78	7196	6237	5128									
		TUB-30E416	1/2	962	0.50	85	6696	5971	5108	4051								
		TUB-30E432	3/4	799	0.75	80	8431	7391	6314									
		TUB-30E424	3/4	917	0.75	81	8238	7412	6502	5373								
		TUB-30E416	3/4	1102	0.75	89	7670	7051	6332	5554	4574	3425						
		TUB-30E432	1	880	1.00	81	9286	8337	7400									
		TUB-30E424	1	1009	1.00	84	9065	8320	7517	6632								
		TUB-30E416	1	1213	1.00	91	8442	7887	7261	6567	5824	4882	3831					
		TUB-30E432	1½	1008	1.50	86	10636	9806	9001	8137								
		TUB-30E424	1½	1155	1.50	88	10377	9732	9050	8321	7533	6458						
		TUB-30E416	1½	1388	1.50	95	9660	9180	8660	8080	7470	6833	6053	5179	4251			
		TUB-30E432	2	1109	2.00	88	11702	10947	10206	9468	8630							
		TUB-30E424	2	1271	1.99	91	11419	10835	10225	9584	8902	8166	7175					
		TUB-30E416	2	1527	1.99	98	10628	10194	9732	9231	8685	8130	7550	6859	6085			
		TUB-30E432	3	1269	3.00	92	13390	12729	12074	11439	10784	10062	9035					
		TUB-30E424	3	1455	3.00	96	13072	12565	12040	11497	10932	10338	9720	9007	8063			
		TUB-30E416	3	1749	3.00	102	12173	11797	11403	10988	10543	10067	9583	9096	8577	7310	5874	
		TUB-30E432	5	1504	5.00	98	15870	15312	14757	14205	13671	13134	12552	11940	11200			
		TUB-30E424	5	1725	4.99	100	15497	15072	14636	14189	13731	13261	12775	12270	11755	10567		
		TUB-30E416	5	2074	5.00	107	14435	14120	13795	13458	13108	12742	12354	11951	11541	10721	9804	
	8 BLADES	TUB-30E832	1/2	596	0.50	73	7042	6009										FEG 50
		TUB-30E832	3/4	683	0.75	78	8070	7166	6174									
		TUB-30E832	1	751	1.00	79	8873	8053	7215									
		TUB-30E832	1½	860	1.49	83	10161	9448	8729	7932								
		TUB-30E832	2	947	2.00	86	11189	10543	9886	9228	8422							
		TUB-30E832	3	1083	2.99	90	12796	12232	11659	11090	10506	9811						
		TUB-30E832	5	1285	5.00	94	15182	14709	14229	13744	13264	12785	12265	11665	10930			
36	Outlet Area: 7.266 ft²																	
	4 BLADES	TUB-36E432	3/4	667	0.75	79	11311	9600										FEG 56
		TUB-36E428	3/4	715	0.73	83	11052	9615	7591									
		TUB-36E420	3/4	863	0.75	87	10454	9258	7737	5870								
		TUB-36E432	1	735	1.00	83	12464	10948	9057									
		TUB-36E428	1	788	1.00	83	12180	10906	9292									
		TUB-36E420	1	950	0.99	90	11508	10443	9145	7602	5651							
		TUB-36E432	1½	842	1.50	87	14279	12986	11467	9336								
		TUB-36E428	1½	902	1.49	88	13942	12855	11577	9965								
		TUB-36E420	1½	1088	1.50	94	13180	12269	11217	9993	8613	6967	5063					
		TUB-36E432	2	925	1.99	88	15686	14524	13205	11689								
		TUB-36E428	2	992	2.00	92	15333	14357	13251	11945	10192							
		TUB-36E420	2	1196	2.00	96	14488	13668	12753	11703	10527	9247	7733	5971				
		TUB-36E432	3	1060	3.00	92	17975	16975	15881	14659	13306							
		TUB-36E428	3	1136	3.00	95	17559	16718	15799	14772	13596	12150						
		TUB-36E420	3	1370	3.00	101	16596	15889	15124	14279	13344	12326	11232	10066	8660			
		TUB-36E432	5	1256	4.99	97	21299	20465	19579	18629	17599	16488	15255					
		TUB-36E428	5	1346	4.99	99	20805	20104	19359	18561	17696	16744	15690	14425				
		TUB-36E420	5	1625	5.00	105	19685	19095	18473	17813	17102	16333	15520	14651	13735	11780	9268	
		TUB-36E432	7½	1438	7.49	102	24386	23662	22905	22110	21270	20376	19420	18432	17289			
		TUB-36E428	7½	1541	7.50	106	23819	23211	22575	21907	21201	20450	19644	18773	17829	15252		
		TUB-36E420	7½	1860	7.50	109	22532	22019	21486	20930	20347	19730	19072	18381	17662	16110	14461	
	8 BLADES	TUB-36E832	3/4	572	0.75	78	10682	9324										FEG 53
		TUB-36E832	1	629	0.99	82	11747	10541	8865									
		TUB-36E832	1½	721	1.50	87	13465	12442	11218	9155								
		TUB-36E832	2	793	1.99	88	14809	13893	12839	11496								
		TUB-36E832	3	908	3.00	92	16957	16169	15295	14313	13064							
		TUB-36E832	5	1076	4.99	97	20094	19438	18736	17974	17149	16200	14951					
		TUB-36E832	7½	1232	7.49	101	23008	22439	21841	21208	20534	19819	19036	18115	16939			

NOTES:
1. Performance certified is for installation Type A: Free inlet, free outlet.
2. Power rating (BHP) does not include transmission losses.
3. Performance ratings do not include the effects of appurtenances (accessories).
4. The sound power ratings shown are in decibels, referred to 10^{-12} watts calculated per AMCA Standard 301.
5. Values shown are for inlet LwiA sound power levels for installation Type A: Free inlet, free outlet. Ratings do not include the effects of end correction.
6. Sound power values shown are at the peak cataloged pressure for each RPM.

Performance Data – Belt Driven

TUB – Die Cast Aluminum Propeller

SIZE	NO. OF BLADES	PROP	MOTOR HP	FAN RPM	MAX. BHP	LwiA	STATIC PRESSURE (IN. W.G.) 0.000 CFM	0.125 CFM	0.250 CFM	0.375 CFM	0.500 CFM	0.625 CFM	0.750 CFM	0.875 CFM	1.000 CFM	1.250 CFM	1.500 CFM	FAN EFF. GRADE
42	Outlet Area: 9.852 ft²																	
	4 BLADES	TUB-42E432	1	518	1.00	78	14698	12386										FEG 56
		TUB-42E428	1	554	0.99	80	14494	12543	10022									
		TUB-42E420	1	650	0.99	84	13764	12165	10193									
		TUB-42E432	1½	593	1.50	82	16826	14805	12642									
		TUB-42E428	1½	634	1.50	82	16587	14890	13051									
		TUB-42E420	1½	745	1.50	88	15775	14412	12825	10935								
		TUB-42E432	2	653	2.00	84	18529	16694	14814	11969								
		TUB-42E428	2	697	1.99	85	18236	16700	15108	13051								
		TUB-42E420	2	818	1.99	91	17321	16094	14709	13119	11257							
		TUB-42E432	3	747	2.99	88	21196	19596	17991	16252								
		TUB-42E428	3	798	2.99	89	20878	19544	18171	16712	14790							
		TUB-42E420	3	938	2.99	95	19862	18805	17655	16379	14960	13359	11453					
		TUB-42E432	5	886	4.99	92	25140	23795	22434	21084	19615	17914						
		TUB-42E428	5	947	5.00	93	24776	23659	22510	21351	20135	18669	16802					
		TUB-42E420	5	1112	5.00	99	23547	22665	21732	20736	19660	18503	17247	15876	14348			
		TUB-42E432	7½	1014	7.49	96	28772	27598	26413	25227	24044	22767	21397	19449				
		TUB-42E428	7½	1084	7.50	97	28361	27387	26394	25380	24370	23319	22118	20705	18963			
		TUB-42E420	7½	1272	7.48	103	26935	26169	25371	24534	23652	22716	21726	20678	19557	17067		
		TUB-42E432	10	1116	9.98	99	31666	30601	29527	28444	27375	26292	25125	23899	22447			
		TUB-42E428	10	1193	10.00	100	31212	30330	29432	28519	27595	26676	25719	24652	23434	20282		
		TUB-42E420	10	1401	10.00	106	29666	28974	28257	27513	26739	25929	25077	24185	23252	21227	18959	
	8 BLADES	TUB-42E832	1	443	1.00	76	14013	12034										FEG 50
		TUB-42E832	1½	507	1.49	80	16037	14319	12356									
		TUB-42E832	2	557	1.99	82	17618	16066	14417									
		TUB-42E832	3	638	2.98	86	20181	18837	17436	15861								
		TUB-42E832	5	757	5.00	91	23945	22821	21653	20468	19159	17465						
		TUB-42E832	7½	866	7.48	94	27392	26415	25408	24373	23337	22216	20869					
		TUB-42E832	10	953	9.97	98	30144	29258	28350	27420	26478	25532	24508	23311	21855			
48	Outlet Area: 12.898 ft²																	
	4 BLADES	TUB-48E432	1½	521	1.50	83	20943	18053	14038									FEG 56
		TUB-48E428	1½	558	1.48	84	20445	18014	14782									
		TUB-48E420	1½	674	1.50	89	19354	17330	14805	11778	7792							
		TUB-48E432	2	573	1.98	85	23033	20459	17326									
		TUB-48E428	2	614	2.00	85	22496	20333	17657									
		TUB-48E420	2	741	2.00	91	21278	19468	17298	14730	11706	7992						
		TUB-48E432	3	656	3.00	89	26369	24169	21622	18531								
		TUB-48E428	3	703	2.98	89	25757	23908	21768	19162								
		TUB-48E420	3	848	2.99	96	24350	22798	21034	18992	16688	14123	10837					
		TUB-48E432	5	778	5.00	93	31273	29453	27451	25201	22679							
		TUB-48E428	5	833	4.98	96	30520	28988	27304	25410	23221	20340						
		TUB-48E420	5	1006	5.00	100	28887	27600	26203	24651	22933	21050	19042	16845	14110			
		TUB-48E432	7½	890	7.48	96	35775	34200	32513	30683	28672	26513						
		TUB-48E428	7½	954	7.49	100	34954	33630	32212	30675	28985	27095	24898	21641				
		TUB-48E420	7½	1151	7.49	104	33051	31936	30752	29485	28099	26603	25006	23297	21523	17343	12556	
		TUB-48E432	10	980	9.98	100	39393	37971	36468	34867	33146	31284	29325	26700				
		TUB-48E428	10	1050	9.99	102	38471	37275	36011	34666	33220	31649	29924	27991	25468			
		TUB-48E420	10	1267	9.99	107	36382	35374	34316	33201	32012	30728	29365	27931	26403	23180	19353	
	8 BLADES	TUB-48E832	1½	446	1.49	82	19743	17445	13745									FEG 53
		TUB-48E832	2	491	1.99	84	21735	19695	17032									
		TUB-48E832	3	562	3.00	89	24878	23140	21097	18150								
		TUB-48E832	5	666	4.99	93	29482	28046	26445	24629	22207							
		TUB-48E832	7½	763	7.50	98	33776	32537	31198	29732	28107	26072	22817					
		TUB-48E832	10	839	9.97	100	37140	36021	34829	33548	32168	30641	28768	26130				

NOTES:
1. Performance certified is for installation Type A: Free inlet, free outlet.
2. Power rating (BHP) does not include transmission losses.
3. Performance ratings do not include the effects of appurtenances (accessories).
4. The sound power ratings shown are in decibels, referred to 10^{-12} watts calculated per AMCA Standard 301.
5. Values shown are for inlet LwiA sound power levels for installation Type A: Free inlet, free outlet. Ratings do not include the effects of end correction.
6. Sound power values shown are at the peak cataloged pressure for each RPM.

Performance Data – Belt Driven

TUB – Cast Aluminum Propeller

SIZE	NO. OF BLADES	PROP	MOTOR HP	FAN RPM	MAX. BHP	LwiA	STATIC PRESSURE (IN. W.G.) 0.000 CFM	0.125 CFM	0.250 CFM	0.375 CFM	0.500 CFM	0.625 CFM	0.750 CFM	0.875 CFM	1.000 CFM	1.250 CFM	1.500 CFM	FAN EFF. GRADE
54	Outlet Area: 16.278 ft²																	
	4 BLADES	TUB-54C320	1½	526	1.50	79	25049	20353										FEG 56
		TUB-54C310	1½	651	1.49	84	24599	20679	16187									
		TUB-54C320	2	578	1.99	81	27526	23212	18032									
		TUB-54C310	2	716	2.00	89	27055	23420	19718	15015								
		TUB-54C320	3	662	2.99	86	31526	27653	23854	18245								
		TUB-54C310	3	819	2.99	93	30947	27684	24768	21049	16844							
		TUB-54C320	5	785	5.00	91	37383	34038	31070	27531	22919							
		TUB-54C310	5	971	4.99	96	36690	33889	31379	28834	25685	22177						
		TUB-54C320	7½	898	7.49	94	42765	39807	37105	34507	31225	27277						
		TUB-54C310	7½	1061	6.51	98	40091	37509	35135	32936	30361	27378	24135					
		TUB-54C320	10	989	10.00	97	47098	44395	41859	39551	37019	33894	30296					
		TUB-54C325	15	1032	14.99	101	53225	51189	48922	46267	43092	39953	36765	33623				
	6 BLADES	TUB-54C625	1½	396	1.49	75	24532	20188										FEG 60
		TUB-54C620	1½	430	1.49	75	24599	20520	15822									
		TUB-54C610	1½	533	1.49	84	23302	19835	16506	13027								
		TUB-54C625	2	436	1.99	78	27010	23020	18111									
		TUB-54C620	2	473	1.99	80	27059	23358	19246									
		TUB-54C610	2	587	2.00	87	25662	22403	19591	16406	12922							
		TUB-54C625	3	499	2.99	82	30913	27336	23797	18779								
		TUB-54C620	3	541	2.99	84	30950	27715	24374	20543								
		TUB-54C610	3	672	3.00	91	29378	26410	24065	21325	18599	15655						
		TUB-54C625	5	592	4.99	87	36674	33607	30835	27474	23311							
		TUB-54C620	5	642	4.99	89	36728	34011	31271	28353	25092	21459						
		TUB-54C610	5	797	5.00	96	34843	32252	30112	28161	25833	23466	21202	18663				
		TUB-54C625	7½	678	7.50	91	42002	39302	36775	34390	31223	27590						
		TUB-54C620	7½	735	7.49	93	42048	39680	37284	34883	32273	29414	26582	22073				
		TUB-54C610	7½	912	7.49	99	39871	37557	35544	33818	32093	30072	27945	25964	23966	19092		
		TUB-54C625	10	746	9.99	94	46215	43749	41391	39234	36930	33815	30528					
		TUB-54C620	10	809	9.99	95	46281	44132	41960	39788	37566	35132	32526	29975	26743			
		TUB-54C610	10	1004	9.99	102	43893	41764	39871	38202	36676	35070	33221	31275	29443	25808	21338	
		TUB-54C625	15	854	14.99	98	52905	50740	48647	46648	44786	42815	40332	37372	34563			
		TUB-54C620	15	926	14.98	100	52975	51099	49209	47304	45410	43479	41419	39202	36912	32269		
		TUB-54C610	15	1061	11.80	103	46385	44357	42536	40895	39430	37974	36360	34555	32724	29317	25705	

NOTES:
1. Performance certified is for installation Type A: Free inlet, free outlet.
2. Power rating (BHP) does not include transmission losses.
3. Performance ratings do not include the effects of appurtenances (accessories).
4. The sound power ratings shown are in decibels, referred to 10^{-12} watts calculated per AMCA Standard 301.
5. Values shown are for inlet LwiA sound power levels for installation Type A: Free inlet, free outlet. Ratings do not include the effects of end correction.
6. Sound power values shown are at the peak cataloged pressure for each RPM.

Performance Data – Belt Driven

TUB – Cast Aluminum Propeller

SIZE	NO. OF BLADES	PROP	MOTOR HP	FAN RPM	MAX. BHP	LwiA	STATIC PRESSURE (IN. W.G.) 0.000 CFM	0.125 CFM	0.250 CFM	0.375 CFM	0.500 CFM	0.625 CFM	0.750 CFM	0.875 CFM	1.000 CFM	1.250 CFM	1.500 CFM	FAN EFF. GRADE
60	Outlet Area: 20.049 ft²																	
	4 BLADES	TUB-60C325	2	481	2.00	82	29719	24731										FEG 56
		TUB-60C320	2	524	2.00	83	30891	26347										
		TUB-60C310	2	647	1.99	90	31216	26592	21171									
		TUB-60C325	3	550	2.99	87	33982	30044	23872									
		TUB-60C320	3	600	3.00	87	35371	31740	25906									
		TUB-60C310	3	741	3.00	92	35752	31848	27258									
		TUB-60C325	5	652	4.99	93	40284	37174	32668	26943								
		TUB-60C320	5	711	4.99	92	41915	39017	34967	29585								
		TUB-60C310	5	878	4.99	98	42362	39148	35465	31543	27353							
		TUB-60C325	7½	747	7.50	97	46154	43524	40201	35757	30434							
		TUB-60C320	7½	814	7.49	95	47987	45526	42520	38349	33520							
		TUB-60C310	7½	955	6.42	99	46077	43148	39885	36284	32635							
		TUB-60C325	10	822	9.99	97	50788	48436	45660	41932	37833							
		TUB-60C320	10	896	9.99	98	52821	50619	48060	44759	40707	36168						
		TUB-60C325	15	941	14.99	102	58141	56122	53854	51184	47752	44192	40161					
		TUB-60C320	15	955	12.10	101	56299	54250	51923	49114	45479	41517	37096					
	6 BLADES	TUB-60C625	2	394	1.99	80	31121	26288										FEG 60
		TUB-60C620	2	429	1.99	84	31199	26435	20628									
		TUB-60C610	2	531	1.99	87	29334	25796	21465	16524								
		TUB-60C625	3	451	2.99	84	35624	31623	25466									
		TUB-60C620	3	491	2.98	86	35707	31825	26921									
		TUB-60C610	3	608	3.00	93	33587	30598	26910	23088	18567							
		TUB-60C625	5	535	4.98	89	42259	39027	34982	28976								
		TUB-60C620	5	582	4.98	91	42325	39187	35139	31202								
		TUB-60C610	5	721	5.00	97	39829	37373	34544	31318	28121	24587						
		TUB-60C625	7½	613	7.50	93	48420	45662	42453	38457	32850							
		TUB-60C620	7½	666	7.48	95	48434	45751	42606	38767	35466							
		TUB-60C610	7½	825	7.47	102	45575	43457	41134	38457	35637	32862	29877	26579				
		TUB-60C625	10	674	9.96	95	53238	50759	47969	44708	40545							
		TUB-60C620	10	733	9.95	100	53307	50898	48191	44876	41533	38550	34433					
		TUB-60C610	10	908	9.96	103	50160	48251	46194	43927	41373	38836	36314	33632	30753			
		TUB-60C625	15	772	14.98	99	60979	58842	56516	53940	51007	47491	42937					
		TUB-60C620	15	840	14.99	102	61088	59013	56756	54246	51237	48266	45682	42886				
		TUB-60C610	15	955	11.61	106	52756	50947	49014	46923	44566	42111	39732	37293	34692	28713		
		TUB-60C625	20	850	20.00	101	67140	65213	63151	60920	58471	55722	52514	48443				
		TUB-60C620	20	924	19.96	104	67197	65323	63319	61154	58714	55904	53216	50855	48456			
		TUB-60C625	25	915	24.95	103	72274	70492	68604	66591	64421	62050	59414	56370	52594			
		TUB-60C620	25	955	22.04	106	69451	67642	65716	63649	61374	58723	56016	53634	51379	45583		

NOTES:
1. Performance certified is for installation Type A: Free inlet, free outlet.
2. Power rating (BHP) does not include transmission losses.
3. Performance ratings do not include the effects of appurtenances (accessories).
4. The sound power ratings shown are in decibels, referred to 10^{-12} watts calculated per AMCA Standard 301.
5. Values shown are for inlet LwiA sound power levels for installation Type A: Free inlet, free outlet. Ratings do not include the effects of end correction.
6. Sound power values shown are at the peak cataloged pressure for each RPM.

Performance Data – Belt Driven

TUB/TUBSH – Fabricated Steel Propeller

SIZE	PROP	MOTOR HP	FAN RPM	MAX. BHP	LwiA	STATIC PRESSURE (IN. W.G.) 0.000 CFM	0.125 CFM	0.250 CFM	0.375 CFM	0.500 CFM	0.625 CFM	0.750 CFM	0.875 CFM	1.000 CFM	1.250 CFM	1.500 CFM	FAN EFF. GRADE
24	Outlet Area: 3.207 ft²																
	TUB-24Z545	1/3	745	0.33	75	4638											FEG 56
	TUB-24Z535	1/3	867	0.33	77	4755	4044	3202									
	TUB-24Z545	1/2	854	0.50	79	5316	4599										
	TUB-24Z535	1/2	995	0.50	80	5457	4799	4256									
	TUB-24Z545	3/4	978	0.75	83	6088	5492										
	TUB-24Z535	3/4	1136	0.75	83	6230	5627	5175	4601								
	TUB-24Z545	1	1076	1.00	85	6698	6174										
	TUB-24Z535	1	1251	1.00	86	6860	6301	5867	5437	4787							
	TUB-24Z545	1½	1233	1.50	88	7675	7233	6690									
	TUB-24Z535	1½	1433	1.50	89	7859	7356	6939	6592	6199	5664						
	TUB-24Z545	2	1356	2.00	91	8441	8046	7574	7008								
	TUB-24Z535	2	1576	2.00	92	8643	8179	7779	7445	7130	6749	6257					
	TUB-24Z545	3	1552	3.00	95	9661	9322	8939	8497	7972							
	TUB-24Z535	3	1803	2.99	96	9888	9474	9108	8780	8498	8224	7918	7544	7081			
30	Outlet Area: 5.034 ft²																
	TUB-30Z545	1/2	659	0.49	77	7509											FEG 56
	TUB-30Z535	1/2	782	0.50	79	7524	6529	5307									
	TUB-30Z545	3/4	754	0.74	80	8592	7230										
	TUB-30Z535	3/4	895	0.75	82	8612	7760	6779									
	TUB-30Z545	1	830	0.99	83	9458	8255										
	TUB-30Z535	1	985	1.00	85	9478	8713	7857	6893								
	TUB-30Z545	1½	951	1.50	88	10837	9818	8389									
	TUB-30Z535	1½	1128	1.50	89	10854	10194	9478	8690	7829							
	TUB-30Z545	2	1047	2.00	89	11931	11023	9952									
	TUB-30Z535	2	1241	1.99	92	11941	11345	10710	10024	9285	8461						
	TUB-30Z545	3	1198	3.00	93	13651	12874	11991	10899								
	TUB-30Z535	3	1421	3.00	95	13673	13157	12615	12043	11437	10790	10124	9233				
	TUB-30Z545	5	1420	5.00	97	16181	15537	14832	14065	13179							
	TUB-30Z535	5	1592	4.21	98	15318	14860	14383	13887	13369	12824	12250	11666	11027			
36	Outlet Area: 7.266 ft²																
	TUB-36Z545	3/4	556	0.74	78	10948											FEG 56
	TUB-36Z535	3/4	660	0.75	80	10974	9561	7857									
	TUB-36Z545	1	613	0.99	81	12071	10036										
	TUB-36Z535	1	727	1.00	82	12088	10825	9363									
	TUB-36Z545	1½	702	1.49	83	13823	12121										
	TUB-36Z535	1½	832	1.50	86	13834	12748	11538	10187								
	TUB-36Z545	2	772	2.00	86	15201	13686										
	TUB-36Z535	2	916	1.99	89	15230	14253	13188	12009	10656							
	TUB-36Z545	3	884	3.00	90	17407	16120	14612									
	TUB-36Z535	3	1049	3.00	93	17442	16596	15696	14729	13684	12558						
	TUB-36Z545	5	1048	5.00	95	20636	19576	18382	17037								
	TUB-36Z535	5	1243	4.99	98	20667	19960	19222	18448	17632	16768	15871	14902	13446			
	TUB-36Z545	7½	1198	7.47	98	23590	22674	21675	20589	19362							
42	Outlet Area: 9.852 ft²																
	TUB-42Z545	1	445	1.00	78	15256	12431										FEG 60
	TUB-42Z530	1	584	0.99	84	14474	12788	11030									
	TUB-42Z545	1½	510	1.50	82	17484	15055										
	TUB-42Z530	1½	669	1.50	88	16581	15111	13632	11985								
	TUB-42Z545	2	561	1.98	84	19233	17000										
	TUB-42Z530	2	736	2.00	91	18242	16907	15568	14163	12501							
	TUB-42Z545	3	642	3.00	88	22010	20059	18129									
	TUB-42Z530	3	843	2.99	96	20894	19730	18557	17389	16139	14038	12686					
	TUB-42Z545	5	761	4.98	92	26089	24454	22812	21086								
	TUB-42Z530	5	999	5.00	101	24760	23779	22792	21803	20820	19361	18704	17496	15916			
	TUB-42Z545	7½	871	7.45	95	29860	28437	26979	25599	23980							
	TUB-42Z530	7½	1144	7.47	103	28354	27498	26638	25774	24911	23707	23175	22247	21290	18972		
	TUB-42Z545	10	959	9.98	98	32877	31588	30272	28964	27726							

NOTES:
1. Performance certified is for installation Type A: Free inlet, free outlet.
2. Power rating (BHP) does not include transmission losses.
3. Performance ratings do not include the effects of appurtenances (accessories).
4. The sound power ratings shown are in decibels, referred to 10^{-12} watts calculated per AMCA Standard 301.
5. Values shown are for inlet LwiA sound power levels for installation Type A: Free inlet, free outlet. Ratings do not include the effects of end correction.
6. Sound power values shown are at the peak cataloged pressure for each RPM.

Performance Data – Belt Driven

TUB/TUBSH – Fabricated Steel Propeller

SIZE	PROP	MOTOR HP	FAN RPM	MAX. BHP	LwiA	STATIC PRESSURE (IN. W.G.) 0.000 CFM	0.125 CFM	0.250 CFM	0.375 CFM	0.500 CFM	0.625 CFM	0.750 CFM	0.875 CFM	1.000 CFM	1.250 CFM	1.500 CFM	FAN EFF. GRADE
48	Outlet Area: 12.898 ft²																
	TUB-48Z545	1½	434	1.48	81	20257	16228										FEG 56
	TUB-48Z535	1½	515	1.50	82	20297	17900	15084									
	TUB-48Z545	2	478	1.98	83	22310	18892										
	TUB-48Z535	2	567	1.98	84	22347	20200	17735									
	TUB-48Z545	3	547	2.99	86	25531	22642										
	TUB-48Z535	3	649	2.99	88	25578	23731	21691	19430								
	TUB-48Z545	5	648	4.98	91	30245	27894	25102									
	TUB-48Z535	5	770	4.99	93	30347	28810	27168	25396	23485	21305						
	TUB-48Z545	7½	742	7.48	95	34632	32621	30336	27416								
	TUB-48Z535	7½	881	7.49	97	34722	33389	31988	30510	28939	27267	25531	23099				
	TUB-48Z545	10	817	9.97	97	38133	36326	34311	32101								
	TUB-48Z535	10	970	9.94	99	38230	37024	35769	34459	33086	31639	30115	28565	26689			
54	Outlet Area: 16.278 ft²																
	TUB-54Z545	1½	329	1.48	77	23718											FEG 60
	TUB-54Z530	1½	430	1.50	84	22765	19928	16843									
	TUB-54Z545	2	362	1.99	81	26097	21886										
	TUB-54Z530	2	473	1.97	87	25041	22473	19758	16182								
	TUB-54Z545	3	415	3.00	84	29917	26306										
	TUB-54Z530	3	541	2.98	90	28641	26408	24105	21630	18122							
	TUB-54Z545	5	492	5.00	89	35468	32494	29137									
	TUB-54Z530	5	642	4.99	95	33988	32117	30197	28239	26151	23779						
	TUB-54Z545	7½	563	7.49	92	40587	38036	35251									
	TUB-54Z530	7½	735	7.49	98	38912	37282	35620	33931	32210	30388	28473	25966				
	TUB-54Z545	10	619	9.96	95	44624	42326	39801	37198								
	TUB-54Z530	10	809	9.99	101	42829	41351	39849	38321	36783	35205	33544	31832	29823			
	TUB-54Z545	15	709	14.97	98	51112	49128	46997	44765	42433							
	TUB-54Z530	15	884	12.98	103	46800	45449	44080	42691	41287	39874	38424	36905	35359	31551		
60	Outlet Area: 20.049 ft²																
	TUB-60Z545	2	320	1.97	79	30484	24072										FEG 60
	TUB-60Z530	2	422	1.99	85	29073	25781	21948									
	TUB-60Z545	3	366	2.98	83	34866	29696										
	TUB-60Z530	3	483	3.00	89	33276	30440	27322	23603								
	TUB-60Z545	5	434	4.97	87	41344	37025										
	TUB-60Z530	5	573	5.00	95	39476	37118	34602	31886	28775	24916						
	TUB-60Z545	7½	497	7.47	91	47345	43638	39676									
	TUB-60Z530	7½	655	7.46	97	45126	43077	40927	38668	36246	33553	30430					
	TUB-60Z545	10	547	9.96	94	52108	48772	45215	40481								
	TUB-60Z530	10	721	9.96	101	49673	47820	45892	43882	41787	39540	37085	34314	31043			
	TUB-60Z545	15	627	14.99	97	59729	56848	53767	50662	45853							
	TUB-60Z530	15	796	13.41	104	54840	53167	51440	49653	47806	45889	43853	41665	39277	33381		
	TUB-60Z545	20	690	19.98	100	65731	63127	60379	57542	54620							
	TUB-60Z545	25	743	24.95	102	70780	68371	65848	63203	60607	57622						

NOTES:
1. Performance certified is for installation Type A: Free inlet, free outlet.
2. Power rating (BHP) does not include transmission losses.
3. Performance ratings do not include the effects of appurtenances (accessories).
4. The sound power ratings shown are in decibels, referred to 10^{-12} watts calculated per AMCA Standard 301.
5. Values shown are for inlet LwiA sound power levels for installation Type A: Free inlet, free outlet. Ratings do not include the effects of end correction.
6. Sound power values shown are at the peak cataloged pressure for each RPM.

Performance Data – Direct Drive

TUD – Die Cast Aluminum Propeller

SIZE	NO. OF BLADES	CATALOG NUMBER	MOTOR HP	FAN RPM	MAX. BHP	LwiA	STATIC PRESSURE (IN. W.G.) 0.000 CFM	0.125 CFM	0.250 CFM	0.375 CFM	0.500 CFM	0.625 CFM	0.750 CFM	0.875 CFM	1.000 CFM	1.250 CFM	1.500 CFM	FAN EFF. GRADE
14	Outlet Area: 1.108 ft²																	
	4 BLADES	TUD-14E416	1/4	1160	0.04	68	926											N/A
		TUD-14E420	1/4	1160	0.05	68	1022	731										
		TUD-14E424	1/4	1160	0.07	67	1133	841										
		TUD-14E428	1/4	1160	0.07	68	1194	884										
		TUD-14E432	1/4	1160	0.09	70	1276											
		TUD-14E416	1/4	1750	0.16	78	1396	1233	1029									
		TUD-14E420	1/4	1750	0.19	78	1542	1387	1172									
		TUD-14E424	1/4	1750	0.23	78	1710	1529	1344									
		TUD-14E428	1/4	1750	0.26	79	1801	1617	1403									
		TUD-14E432	1/3	1750	0.31	80	1925	1708										
	8 BLADES	TUD-14E816	1/4	1160	0.06	70	907	668										N/A
		TUD-14E820	1/4	1160	0.07	71	1038	813										
		TUD-14E824	1/4	1160	0.09	71	1172	940										
		TUD-14E828	1/4	1160	0.11	71	1259	1012										
		TUD-14E832	1/4	1160	0.12	72	1334											
		TUD-14E816	1/4	1750	0.20	82	1368	1254	1085									
		TUD-14E820	1/4	1750	0.25	82	1566	1447	1286									
		TUD-14E824	1/3	1750	0.30	83	1768	1629	1475									
		TUD-14E828	1/2	1750	0.37	83	1899	1757	1593									
		TUD-14E832	1/2	1750	0.41	83	2012	1873										
16	Outlet Area: 1.44 ft²																	
	4 BLADES	TUD-16E416	1/4	1160	0.07	72	1350	1009										N/A
		TUD-16E420	1/4	1160	0.08	71	1503	1167										
		TUD-16E424	1/4	1160	0.10	70	1674	1344										
		TUD-16E428	1/4	1160	0.12	72	1795	1435										
		TUD-16E432	1/4	1160	0.15	72	1921	1526										
		TUD-16E416	1/4	1750	0.24	82	2037	1839	1594									
		TUD-16E420	1/3	1750	0.29	83	2268	2075	1837	1487								
		TUD-16E424	1/3	1750	0.36	81	2525	2320	2099									
		TUD-16E428	1/2	1750	0.42	82	2707	2483	2241									
		TUD-16E432	1/2	1750	0.50	83	2898	2648	2392									
	8 BLADES	TUD-16E816	1/4	1160	0.10	74	1335	1096										N/A
		TUD-16E820	1/4	1160	0.12	75	1554	1304										
		TUD-16E824	1/4	1160	0.14	75	1754	1497										
		TUD-16E828	1/4	1160	0.18	73	1930	1657										
		TUD-16E832	1/4	1160	0.20	74	2066	1788										
		TUD-16E816	1/3	1750	0.33	85	2014	1875	1707	1479								
		TUD-16E820	1/2	1750	0.41	85	2345	2201	2025	1791								
		TUD-16E824	1/2	1750	0.50	86	2646	2486	2309									
		TUD-16E828	3/4	1750	0.61	86	2912	2744	2555									
		TUD-16E832	3/4	1750	0.71	86	3117	2965	2768									
18	Outlet Area: 1.817 ft²																	
	4 BLADES	TUD-18E412	1/4	1160	0.08	75	1604	1187										N/A
		TUD-18E416	1/4	1160	0.09	74	1886	1487										
		TUD-18E420	1/4	1160	0.12	73	2117	1727										
		TUD-18E424	1/4	1160	0.15	72	2362	1989										
		TUD-18E428	1/4	1160	0.19	74	2568	2156										
		TUD-18E432	1/4	1160	0.22	74	2754	2299										
		TUD-18E412	1/4	1750	0.27	85	2420	2161	1875	1547								
		TUD-18E416	1/3	1750	0.32	87	2846	2609	2328	2005								
		TUD-18E420	1/2	1750	0.41	85	3194	2950	2686	2344								
		TUD-18E424	1/2	1750	0.53	85	3563	3338	3080	2753								
		TUD-18E428	3/4	1750	0.64	85	3874	3612	3333	3010								
		TUD-18E432	3/4	1750	0.76	86	4154	3884	3567	3203								
	8 BLADES	TUD-18E812	1/4	1160	0.11	74	1543	1274	974									N/A
		TUD-18E816	1/4	1160	0.14	76	1879	1612	1247									
		TUD-18E820	1/4	1160	0.18	77	2219	1935										
		TUD-18E824	1/4	1160	0.22	76	2501	2210										
		TUD-18E828	1/3	1160	0.28	75	2805	2494										
		TUD-18E832	1/3	1160	0.34	76	3024	2742										
		TUD-18E812	1/3	1750	0.36	87	2328	2152	1973	1784								
		TUD-18E816	1/2	1750	0.49	88	2835	2670	2487	2279	2025							
		TUD-18E820	3/4	1750	0.62	89	3348	3175	2979	2745	2458							
		TUD-18E824	3/4	1750	0.77	89	3773	3590	3391	3182	2849							
		TUD-18E828	1	1750	0.96	89	4232	4039	3826	3590	3254							

NOTES:

1. Performance certified is for installation Type A: Free inlet, free outlet.
2. Performance ratings do not include the effects of appurtenances (accessories).
3. The sound power ratings shown are in decibels, referred to 10^{-12} watts calculated per AMCA Standard 301.
4. Values shown are for inlet LwiA sound power levels for installation Type A: Free inlet, free outlet. Ratings do not include the effects of end correction.
5. Sound power values shown are at the peak cataloged pressure for each RPM.

Performance Data – Direct Drive

TUD – Die Cast Aluminum Propeller

SIZE	NO. OF BLADES	CATALOG NUMBER	MOTOR HP	FAN RPM	MAX. BHP	LwiA	STATIC PRESSURE (IN. W.G.) 0.000 CFM	0.125 CFM	0.250 CFM	0.375 CFM	0.500 CFM	0.625 CFM	0.750 CFM	0.875 CFM	1.000 CFM	1.250 CFM	1.500 CFM	FAN EFF. GRADE
21	Outlet Area: 2.463 ft²																	
	4 BLADES	TUD-21E412	1/4	1160	0.12	78	2281	1735										FEG 50
		TUD-21E416	1/4	1160	0.15	78	2745	2235										
		TUD-21E420	1/4	1160	0.19	77	3134	2656										
		TUD-21E424	1/4	1160	0.25	75	3547	3082										
		TUD-21E428	1/3	1160	0.31	76	3903	3343										
		TUD-21E432	1/2	1160	0.37	77	4175	3627										
		TUD-21E412	1/2	1750	0.40	89	3440	3090	2728	2308								
		TUD-21E416	1/2	1750	0.51	90	4140	3828	3476	3082	2557							
		TUD-21E420	3/4	1750	0.66	91	4728	4429	4102	3723	3152							
		TUD-21E424	1	1750	0.87	88	5352	5066	4745	4373	3852							
		TUD-21E428	1	1750	1.05	88	5889	5521	5147	4759	4286							
		TUD-21E432	1 1/2	1750	1.28	89	6298	5961	5585	5150	4672							
	8 BLADES	TUD-21E812	1/4	1160	0.17	79	2203	1869	1503									N/A
		TUD-21E816	1/4	1160	0.23	80	2760	2426	2008									
		TUD-21E820	1/3	1160	0.29	83	3289	2957	2491									
		TUD-21E824	1/2	1160	0.37	83	3789	3443	3008									
		TUD-21E828	1/2	1160	0.47	81	4248	3901	3440									
		TUD-21E832	3/4	1160	0.58	81	4646	4288	3827									
		TUD-21E812	3/4	1750	0.59	91	3323	3095	2877	2661	2408	2154						
		TUD-21E816	3/4	1750	0.80	92	4163	3953	3726	3478	3200	2891						
		TUD-21E820	1	1750	1.01	93	4961	4757	4529	4264	3951	3588						
		TUD-21E824	1 1/2	1750	1.28	93	5716	5497	5262	5007	4726	4341						
		TUD-21E828	1 1/2	1750	1.63	93	6408	6192	5956	5691	5389	4979						
24	Outlet Area: 3.207 ft²																	
	4 BLADES	TUD-24E412	1/4	860	0.06	71	2303	1261										FEG 56
		TUD-24E416	1/4	860	0.08	76	2829	1861										
		TUD-24E420	1/4	860	0.11	75	3280	2356										
		TUD-24E424	1/4	860	0.15	72	3758	2874										
		TUD-24E428	1/4	860	0.19	73	4174	3155										
		TUD-24E432	1/4	860	0.23	74	4456	3476										
		TUD-24E412	1/4	1160	0.15	79	3106	2402	1526									
		TUD-24E416	1/4	1160	0.21	85	3816	3172	2337									
		TUD-24E420	1/3	1160	0.28	83	4424	3854	2958									
		TUD-24E424	1/2	1160	0.37	80	5069	4499	3678									
		TUD-24E428	1/2	1160	0.46	81	5631	4893	4091									
		TUD-24E432	3/4	1160	0.57	82	6010	5367	4522									
		TUD-24E412	1/2	1750	0.52	92	4686	4207	3762	3232	2657							
		TUD-24E416	3/4	1750	0.72	93	5758	5345	4910	4431	3872	3196						
		TUD-24E420	1	1750	0.96	95	6674	6316	5926	5501	4901	4060						
		TUD-24E424	1/2	1750	1.30	93	7648	7292	6903	6471	5942	5213						
		TUD-24E428	1/2	1750	1.59	92	8494	8003	7513	7032	6500	5848						
		TUD-24E432	2	1750	1.96	91	9067	8667	8226	7728	7156							
	8 BLADES	TUD-24E812	1/4	860	0.10	74	2234	1672										FEG 53
		TUD-24E816	1/4	860	0.13	76	2866	2275										
		TUD-24E820	1/4	860	0.18	78	3444	2862										
		TUD-24E824	1/4	860	0.23	77	4040	3455										
		TUD-24E828	1/3	860	0.30	76	4530	3964										
		TUD-24E832	1/2	860	0.38	76	5011	4383										
		TUD-24E812	1/4	1160	0.25	82	3014	2601	2163	1710								
		TUD-24E816	1/3	1160	0.34	83	3866	3458	2976	2460								
		TUD-24E820	1/2	1160	0.44	86	4646	4264	3756	3104								
		TUD-24E824	3/4	1160	0.57	86	5450	5053	4562	3919								
		TUD-24E828	3/4	1160	0.73	87	6110	5730	5247	4415								
		TUD-24E832	1	1160	0.92	87	6759	6313	5822	5129								
		TUD-24E812	1	1750	0.87	93	4546	4260	3993	3743	3448	3122	2820	2531	2246			
		TUD-24E816	1 1/2	1750	1.16	95	5833	5573	5296	4996	4675	4336	3991	3651	3262			
		TUD-24E820	1 1/2	1750	1.51	97	7009	6771	6510	6218	5876	5488	5040	4611				
		TUD-24E824	2	1750	1.97	97	8222	7970	7701	7408	7080	6711	6301	5824				
		TUD-24E828	3	1750	2.53	96	9217	8979	8720	8435	8115	7740	7267					
		TUD-24E832	3	1750	3.19	95	10197	9910	9609	9293	8965	8629	8235					

NOTES:
1. Performance certified is for installation Type A: Free inlet, free outlet.
2. Performance ratings do not include the effects of appurtenances (accessories).
3. The sound power ratings shown are in decibels, referred to 10^{-12} watts calculated per AMCA Standard 301.
4. Values shown are for inlet LwiA sound power levels for installation Type A: Free inlet, free outlet. Ratings do not include the effects of end correction.
5. Sound power values shown are at the peak cataloged pressure for each RPM.

Performance Data – Direct Drive

TUD – Die Cast Aluminum Propeller

SIZE	NO. OF BLADES	CATALOG NUMBER	MOTOR HP	FAN RPM	MAX. BHP	LwiA	STATIC PRESSURE (IN. W.G.) 0.000 CFM	0.125 CFM	0.250 CFM	0.375 CFM	0.500 CFM	0.625 CFM	0.750 CFM	0.875 CFM	1.000 CFM	1.250 CFM	1.500 CFM	FAN EFF. GRADE
30	Outlet Area: 5.034 ft²																	
	4 BLADES	TUD-30E412	1/4	860	0.27	82	5117	4195	3111									FEG 60
		TUD-30E416	1/3	860	0.35	84	6144	5188	4170									
		TUD-30E420	1/2	860	0.49	81	7101	6353	5289									
		TUD-30E424	3/4	860	0.64	81	8057	7232	6207	4979								
		TUD-30E428	3/4	860	0.78	79	8860	7941	6860	5680								
		TUD-30E432	1	860	0.94	81	9393	8589	7447	6157								
		TUD-30E412	3/4	1160	0.66	89	6902	6210	5529	4720	3879							
		TUD-30E416	1	1160	0.86	92	8287	7621	6853	6121	5300							
		TUD-30E420	1 1/2	1160	1.20	90	9578	9058	8449	7688	6800	5876						
		TUD-30E424	1 1/2	1160	1.56	87	10868	10281	9631	8893	8054	7155						
		TUD-30E428	2	1160	1.90	87	11950	11294	10574	9764	8971	8113						
		TUD-30E432	3	1160	2.31	88	12670	12107	11459	10641	9700	8708						
		TUD-30E412	3	1750	2.27	102	10412	9951	9494	9045	8601	8114	7571	7028	6487			
		TUD-30E416	3	1750	2.97	102	12502	12074	11625	11152	10633	10105	9620	9152	8644			
		TUD-30E420	5	1750	4.11	104	14450	14118	13766	13392	12988	12539	12038	11505	10932	9718	8445	
		TUD-30E424	5	1750	5.35	98	16396	16016	15621	15209	14778	14322	13838	13327	12789	11611	10416	
	8 BLADES	TUD-30E812	1/2	860	0.43	83	4711	4209	3601	2957								FEG 53
		TUD-30E816	3/4	860	0.60	86	6270	5670	5128	4406								
		TUD-30E820	3/4	860	0.72	87	7043	6562	5920	5072								
		TUD-30E824	1	860	1.00	85	8418	7826	7170	6401								
		TUD-30E828	1 1/2	860	1.25	82	9526	8904	8242	7510	6593							
		TUD-30E832	1 1/2	860	1.51	82	10318	9752	9111	8354								
		TUD-30E812	1	1160	1.05	91	6354	5996	5602	5156	4683	4204						
		TUD-30E816	1 1/2	1160	1.46	93	8458	8004	7572	7175	6755	6216	5612					
		TUD-30E820	2	1160	1.78	94	9499	9159	8778	8332	7771	7152	6451					
		TUD-30E824	3	1160	2.45	94	11354	10925	10472	9993	9482	8916	8271	7396				
		TUD-30E828	3	1160	3.07	90	12849	12395	11924	11435	10933	10398	9791	9099				
		TUD-30E832	5	1160	3.71	90	13918	13508	13074	12607	12103	11548	10921	10234				
		TUD-30E812	5	1750	3.61	102	9586	9355	9114	8864	8602	8324	8030	7727	7418	6778	6148	
		TUD-30E816	5	1750	5.03	105	12759	12455	12157	11864	11578	11301	11039	10780	10513	9893	9132	
		TUD-30E820	5	1750	5.40	104	14331	14112										
36	Outlet Area: 7.266 ft²																	
	4 BLADES	TUD-36E412	1/2	860	0.40	85	6856	5579	4090									FEG 56
		TUD-36E416	1/2	860	0.53	86	8744	7421	5921									
		TUD-36E420	3/4	860	0.75	88	10584	9538	7847									
		TUD-36E424	1	860	1.02	84	12257	11059	9693									
		TUD-36E428	1 1/2	860	1.32	88	13740	12437	11049	9226								
		TUD-36E432	1 1/2	860	1.63	87	14954	13701	12190	10429								
		TUD-36E412	1	1160	0.99	92	9248	8358	7331	6205	5132							
		TUD-36E416	1 1/2	1160	1.31	94	11795	10785	9841	8774	7510							
		TUD-36E420	2	1160	1.83	97	14276	13564	12687	11433	10085							
		TUD-36E424	3	1160	2.50	95	16532	15666	14746	13777	12619	11058						
		TUD-36E428	3	1160	3.24	95	18533	17580	16595	15588	14491	13235						
		TUD-36E432	5	1160	3.99	94	20170	19273	18297	17205	16000	14750	12998					
		TUD-36E412	5	1750	3.40	104	13951	13382	12781	12140	11452	10727	9967	9237	8523	7061		
		TUD-36E416	5	1750	4.51	107	17794	17116	16452	15804	15187	14561	13869	13100	12286	10534		
		TUD-36E420	7 1/2	1750	6.29	108	21537	21087	20603	20077	19496	18815	17979	17101	16221	14391		
		TUD-36E424	10	1750	8.59	106	24941	24376	23797	23202	22591	21966	21331	20667	19944	18207		
		TUD-36E428	10	1750	11.10	108	27960	27334	26699	26054	25400	24739					19311	
	8 BLADES	TUD-36E812	3/4	860	0.71	87	6756	6004	5193	4333								FEG 53
		TUD-36E816	1	860	0.92	89	8818	8044	7146	6261								
		TUD-36E820	1 1/2	860	1.22	90	10927	10215	9386	8376	7086							
		TUD-36E824	1 1/2	860	1.57	93	13038	12101	11188	10211	8899							
		TUD-36E828	2	860	2.00	92	14483	13737	12872	11805	10323							
		TUD-36E832	3	860	2.55	91	16253	15446	14512	13355	11917							
		TUD-36E812	2	1160	1.74	95	9113	8565	7993	7395	6780	6144	5487					
		TUD-36E816	3	1160	2.26	97	11893	11336	10739	10079	9399	8754	8039					
		TUD-36E820	3	1160	2.99	98	14739	14226	13676	13077	12411	11670	10827	9861				
		TUD-36E824	5	1160	3.89	100	17587	16890	16197	15512	14851	14143	13296	12306				
		TUD-36E828	5	1160	4.92	100	19536	18998	18421	17795	17103	16320	15413	14289				
		TUD-36E832	7 1/2	1160	6.26	98	21923	21341	20718	20042	19294	18443	17477	16413				
		TUD-36E812	7 1/2	1750	5.95	108	13748	13389	13023	12651	12272	11884	11488	11088	10682	9855	9001	
		TUD-36E816	7 1/2	1750	7.74	110	17943	17580	17207	16822	16426	16015	15580	15127	14670	13796	12933	
		TUD-36E820	10	1750	10.25	112	22236	21902	21559	21204	20839	20460	20066	19656	19224	18296	17277	

NOTES:
1. Performance certified is for installation Type A: Free inlet, free outlet.
2. Performance ratings do not include the effects of appurtenances (accessories).
3. The sound power ratings shown are in decibels, referred to 10^{-12} watts calculated per AMCA Standard 301.
4. Values shown are for inlet LwiA sound power levels for installation Type A: Free inlet, free outlet. Ratings do not include the effects of end correction.
5. Sound power values shown are at the peak cataloged pressure for each RPM.

Performance Data – Direct Drive

TUD – Die Cast Aluminum Propeller

SIZE	NO. OF BLADES	CATALOG NUMBER	MOTOR HP	FAN RPM	MAX. BHP	LwiA	STATIC PRESSURE (IN. W.G.) 0.000 CFM	0.125 CFM	0.250 CFM	0.375 CFM	0.500 CFM	0.625 CFM	0.750 CFM	0.875 CFM	1.000 CFM	1.250 CFM	1.500 CFM	FAN EFF. GRADE
42	Outlet Area: 9.852 ft²																	
	4 BLADES	TUD-42E412	1 1/2	860	1.28	92	13140	11810	10451	8871								FEG 56
		TUD-42E416	2	860	1.68	93	16010	14682	13215	11763	10105							
		TUD-42E420	3	860	2.33	93	18720	17701	16489	14937	13157	11292						
		TUD-42E424	3	860	3.07	91	21353	20188	18911	17478	15806	13928						
		TUD-42E428	5	860	3.79	90	23598	22298	20894	19348	17779	16024						
		TUD-42E432	5	860	4.61	91	25195	24057	22759	21159	19346	17389						
		TUD-42E412	3	1160	3.14	100	17724	16742	15751	14764	13690	12501	11333					
		TUD-42E416	5	1160	4.14	101	21595	20628	19617	18541	17423	16354	15263	14007				
		TUD-42E420	7 1/2	1160	5.73	100	25251	24520	23728	22858	21860	20702	19467	18125	16775			
		TUD-42E424	7 1/2	1160	7.53	97	28802	27955	27067	26133	25142	24085	22947	21691	20324			
		TUD-42E428	10	1160	9.32	98	31830	30882	29896	28867	27782	26635	25460	24303	23113	20157		
		TUD-42E432	10	1160	11.33	99	33985									22184		
	8 BLADES	TUD-42E812	2	860	2.06	92	12300	11583	10801	9934	9021							FEG 53
		TUD-42E816	3	860	2.86	95	16290	15428	14582	13776	12916	11885	10736					
		TUD-42E820	5	860	3.55	96	18761	18082	17327	16457	15394	14210	12863					
		TUD-42E824	5	860	4.80	96	22413	21541	20633	19688	18704	17610	16338	14685				
		TUD-42E828	7 1/2	860	6.04	93	25243	24386	23487	22541	21549	20475	19244	17807				
		TUD-42E832	7 1/2	860	7.37	93	27598	26792	25932	25005	23995	22871	21602					
		TUD-42E812	5	1160	5.06	100	16590	16069	15524	14952	14344	13701	13042	12360	11671			
		TUD-42E816	7 1/2	1160	7.02	103	21973	21331	20696	20067	19449	18854	18254	17613	16895	15283		
		TUD-42E820	10	1160	8.69	104	25305	24813	24294	23743	23154	22516	21797	20996	20151	18291		
		TUD-42E824	10	1160	10.92	102	30232	29591	28937	28267	27581							
48	Outlet Area: 12.898 ft²																	
	4 BLADES	TUD-48E412	2	860	1.70	92	16251	14648	12792	10771	8835							FEG 56
		TUD-48E416	3	860	2.25	95	20728	18913	17216	15271	12978							
		TUD-48E420	3	860	3.14	97	25088	23804	22209	19933	17495							
		TUD-48E424	5	860	4.29	97	29053	27494	25837	24085	21957	19015						
		TUD-48E428	7 1/2	860	5.56	96	32569	30855	29081	27266	25276	22948						
		TUD-48E432	7 1/2	860	6.86	96	35446	33831	32070	30092	27918	25638	22226					
		TUD-48E412	5	1160	4.17	101	21921	20767	19526	18170	16711	15194	13749	12326				
		TUD-48E416	7 1/2	1160	5.53	102	27958	26598	25274	24015	22755	21318	19716	18001				
		TUD-48E420	7 1/2	1160	7.72	105	33840	32924	31918	30785	29416	27686	25935	24111	22260			
		TUD-48E424	10	1160	10.54	102	39188	38048	36869	35650	34395	33105	31713	30107	28228			
	8 BLADES	TUD-48E812	3	860	2.97	95	16015	15029	13999	12922	11812	10663						FEG 53
		TUD-48E816	5	860	3.89	98	20901	19898	18822	17628	16410	15249	13927					
		TUD-48E820	5	860	5.14	99	25901	24978	23985	22902	21694	20346	18803	17017				
		TUD-48E824	7 1/2	860	6.67	102	30906	29653	28406	27179	25988	24693	23136	21317				
		TUD-48E828	10	860	8.44	101	34330	33363	32323	31191	29936	28506	26837	24737				
		TUD-48E832	10	860	10.74	99	38526	37479	36355	35133	33775	32222	30463	28499				
		TUD-48E812	7 1/2	1160	7.32	104	21602	20877	20136	19378	18598	17799	16988	16164	15325	13592		
		TUD-48E816	10	1160	9.58	105	28191	27459	26699	25909	25083	24197	23277	22376	21515	19737	17574	
		TUD-48E820	10	1160	10.99	107	34937	34263										

NOTES:
1. Performance certified is for installation Type A: Free inlet, free outlet.
2. Performance ratings do not include the effects of appurtenances (accessories).
3. The sound power ratings shown are in decibels, referred to 10^{-12} watts calculated per AMCA Standard 301.
4. Values shown are for inlet LwiA sound power levels for installation Type A: Free inlet, free outlet. Ratings do not include the effects of end correction.
5. Sound power values shown are at the peak cataloged pressure for each RPM.

Performance Data – Belt Driven

THB – Die Cast Aluminum Propeller

SIZE	NO. OF BLADES	PROP	MOTOR HP	FAN RPM	MAX. BHP	LwiA	STATIC PRESSURE (IN. W.G.)										
							0.000	0.125	0.250	0.375	0.500	0.625	0.750	0.875	1.000	1.250	1.500
							CFM	CFM	CFM	CFM	CFM	CFM	CFM	CFM	CFM	CFM	CFM
14	4 BLADES	THB-14E432	1/4	1680	0.25	80	2092	1851									
		THB-14E428	1/4	1780	0.25	81	2049	1874	1615								
		THB-14E420	1/4	1998	0.25	82	1946	1812	1626	1364							
		THB-14E432	1/3	1843	0.33	83	2295	2080	1792								
		THB-14E428	1/3	1953	0.33	83	2248	2093	1893								
		THB-14E420	1/3	2192	0.33	86	2135	2016	1864	1655							
		THB-14E432	1/2	2117	0.50	87	2636	2454	2241								
		THB-14E428	1/2	2242	0.50	87	2581	2449	2292	2087							
		THB-14E420	1/2	2517	0.50	88	2451	2350	2232	2079	1892	1625					
		THB-14E432	3/4	2423	0.75	90	3017	2861	2684	2481							
		THB-14E428	3/4	2567	0.75	90	2955	2842	2714	2566	2373						
		THB-14E420	3/4	2882	0.75	92	2807	2720	2623	2511	2371	2207	2025				
	8 BLADES	THB-14E832	1/4	1547	0.25	80	1945	1724									
		THB-14E832	1/3	1697	0.33	83	2134	1948									
		THB-14E832	1/2	1949	0.50	86	2451	2300	1993								
		THB-14E832	3/4	2231	0.75	90	2806	2679	2505								
16	4 BLADES	THB-16E432	1/4	1409	0.25	78	2627	2334									
		THB-16E428	1/4	1501	0.25	80	2568	2326	1951								
		THB-16E420	1/4	1710	0.25	82	2406	2217	1937								
		THB-16E432	1/3	1546	0.33	81	2882	2627	2222								
		THB-16E428	1/3	1646	0.33	82	2816	2601	2313								
		THB-16E420	1/3	1876	0.33	84	2640	2472	2245	1944							
		THB-16E432	1/2	1776	0.50	85	3311	3098	2806								
		THB-16E428	1/2	1891	0.50	86	3236	3054	2834	2532							
		THB-16E420	1/2	2155	0.50	88	3032	2890	2719	2487	2220						
		THB-16E432	3/4	2033	0.75	88	3790	3609	3389	3085							
		THB-16E420	3/4	2466	0.75	92	3470	3348	3210	3043	2830	2602					
		THB-16E428	3/4	2164	0.75	89	3703	3547	3369	3158	2872						
		THB-16E432	1	2237	1.00	91	4170	4008	3820	3583	3277						
		THB-16E428	1	2382	1.00	92	4076	3936	3780	3604	3394	3110					
		THB-16E420	1	2714	1.00	94	3819	3709	3588	3451	3283	3083	2876				
	8 BLADES	THB-16E832	1/4	1270	0.25	78	2512	2246									
		THB-16E832	1/3	1393	0.33	80	2755	2528									
		THB-16E832	1/2	1600	0.50	84	3165	2978	2667								
		THB-16E832	3/4	1831	0.75	87	3622	3464	3259	2869							
		THB-16E832	1	2015	1.00	90	3986	3845	3675	3423							
18	4 BLADES	THB-18E432	1/4	1210	0.25	78	3210	2848									
		THB-18E428	1/4	1287	0.25	79	3114	2785	2297								
		THB-18E420	1/4	1501	0.25	81	2923	2665	2284								
		THB-18E432	1/3	1327	0.33	80	3521	3211	2675								
		THB-18E428	1/3	1412	0.33	81	3416	3126	2727								
		THB-18E420	1/3	1646	0.33	84	3205	2976	2658								
		THB-18E432	1/2	1524	0.50	83	4043	3787	3389	2852							
		THB-18E428	1/2	1622	0.50	85	3924	3679	3375	2983							
		THB-18E420	1/2	1891	0.50	87	3682	3489	3251	2935							
		THB-18E432	3/4	1744	0.75	87	4627	4411	4133	3712							
		THB-18E428	3/4	1856	0.75	89	4491	4281	4038	3740	3384						
		THB-18E420	3/4	2164	0.75	91	4214	4048	3859	3623	3338	3009					
		THB-18E432	1	1920	1.00	89	5094	4901	4670	4341	3946						
		THB-18E428	1	2043	1.00	92	4943	4754	4544	4298	4004	3664					
		THB-18E420	1	2382	1.00	94	4638	4489	4324	4133	3896	3634	3335				
		THB-18E432	1½	2197	1.50	93	5829	5663	5476	5253	4942	4595	4227				
		THB-18E428	1½	2339	1.50	95	5659	5496	5320	5126	4905	4651	4373				
		THB-18E420	1½	2727	1.50	97	5310	5181	5043	4891	4719	4514	4286	4055	3770		
	8 BLADES	THB-18E832	1/4	1067	0.25	76	3111	2778									
		THB-18E832	1/3	1170	0.33	78	3412	3126									
		THB-18E832	1/2	1344	0.50	82	3919	3683	3309								
		THB-18E832	3/4	1539	0.75	84	4488	4289	4033	3610							
		THB-18E832	1	1693	1.00	86	4937	4759	4546	4239	3822						
		THB-18E832	1½	1938	1.50	90	5651	5499	5326	5120	4829	4460					

NOTES:
1. Performance certified is for installation Type A: Free inlet, free outlet.
2. Power rating (BHP) does not include transmission losses.
3. Performance ratings do not include the effects of appurtenances (accessories).
4. The sound power ratings shown are in decibels, referred to 10^{-12} watts calculated per AMCA Standard 301.
5. Values shown are for inlet LwiA sound power levels for installation Type A: Free inlet, free outlet. Ratings do not include the effects of end correction.
6. Sound power values shown are at the peak cataloged pressure for each RPM.

Performance Data – Belt Driven

THB – Die Cast Aluminum Propeller

SIZE	NO. OF BLADES	PROP	MOTOR HP	FAN RPM	MAX. BHP	LwiA	STATIC PRESSURE (IN. W.G.)										
							0.000	0.125	0.250	0.375	0.500	0.625	0.750	0.875	1.000	1.250	1.500
							CFM	CFM	CFM	CFM	CFM	CFM	CFM	CFM	CFM	CFM	CFM
21	4 BLADES	THB-21E432	1/4	1009	0.25	75	4010	3381									
		THB-21E428	1/4	1077	0.25	76	3913	3374									
		THB-21E420	1/4	1260	0.25	80	3647	3236	2643								
		THB-21E432	1/3	1106	0.33	78	4395	3860									
		THB-21E428	1/3	1181	0.33	79	4291	3808	3177								
		THB-21E420	1/3	1382	0.33	82	4000	3633	3163								
		THB-21E432	1/2	1271	0.50	81	5051	4624	4002								
		THB-21E428	1/2	1356	0.50	82	4927	4514	4036								
		THB-21E420	1/2	1587	0.50	86	4594	4282	3916	3437							
		THB-21E432	3/4	1454	0.75	85	5778	5421	4917	4375							
		THB-21E428	3/4	1552	0.75	86	5639	5283	4894	4433							
		THB-21E420	3/4	1816	0.75	90	5257	4988	4688	4341	3896						
		THB-21E432	1	1601	1.00	88	6363	6044	5636	5122	4603						
		THB-21E428	1	1709	1.00	90	6209	5889	5544	5162	4703						
		THB-21E420	1	1999	1.00	93	5786	5545	5281	4988	4646	4212					
		THB-21E432	1½	1832	1.50	91	7281	7008	6693	6277	5831	5400					
		THB-21E428	1½	1956	1.50	94	7107	6829	6535	6225	5883	5489					
		THB-21E420	1½	2288	1.50	97	6623	6414	6191	5951	5690	5395	5049	4590			
		THB-21E432	2	2017	2.00	94	8016	7771	7498	7168	6756	6364	5972				
		THB-21E428	2	2153	2.00	97	7822	7572	7309	7033	6743	6423	6065	5603			
		THB-21E420	2	2519	2.00	99	7292	7103	6904	6693	6468	6226	5958	5651	5282		
	8 BLADES	THB-21E832	1/4	879	0.25	74	3872	3352									
		THB-21E832	1/3	964	0.33	76	4247	3803									
		THB-21E832	1/2	1107	0.50	80	4877	4514	3957								
		THB-21E832	3/4	1267	0.75	83	5581	5276	4870	4306							
		THB-21E832	1	1395	1.00	86	6145	5873	5540	5079							
		THB-21E832	1½	1596	1.50	89	7031	6797	6530	6202	5777						
		THB-21E832	2	1757	2.00	92	7740	7530	7297	7030	6698	6297					
24	4 BLADES	THB-24E432	1/3	948	0.33	76	5474	4677									
		THB-24E424	1/3	1089	0.33	79	5184	4555	3748								
		THB-24E416	1/3	1312	0.33	84	4619	4171	3571								
		THB-24E432	1/2	1088	0.50	81	6282	5642	4808								
		THB-24E424	1/2	1251	0.50	83	5955	5416	4808	3957							
		THB-24E416	1/2	1507	0.50	88	5306	4926	4471	3838							
		THB-24E432	3/4	1246	0.75	84	7194	6661	5933	5220							
		THB-24E424	3/4	1432	0.74	87	6817	6351	5851	5260	4463						
		THB-24E416	3/4	1725	0.75	93	6073	5748	5378	4940	4346						
		THB-24E432	1	1371	1.00	86	7916	7441	6830	6164							
		THB-24E424	1	1576	1.00	90	7502	7082	6636	6151	5554	4769					
		THB-24E416	1	1899	1.00	96	6686	6393	6070	5704	5266	4685					
		THB-24E432	1½	1569	1.50	90	9059	8653	8180	7577	7017	6356					
		THB-24E424	1½	1804	1.50	94	8588	8223	7841	7443	7008	6496	5876				
		THB-24E416	1½	2173	1.50	99	7651	7398	7125	6829	6502	6127	5661	5062			
		THB-24E432	2	1727	2.00	93	9971	9606	9198	8701	8138	7650	7051				
		THB-24E424	2	1986	2.00	97	9454	9125	8782	8426	8056	7650	7181	6634	5963		
		THB-24E416	2	2392	2.00	102	8422	8193	7951	7692	7413	7109	6766	6357	5865		
		THB-24E432	3	1977	3.00	96	11415	11100	10758	10380	9928	9431	8987	8562	7954		
		THB-24E424	3	2273	2.99	101	10820	10534	10238	9934	9621	9300	8958	8580	8157	7132	
		THB-24E416	3	2738	3.00	105	9640	9442	9234	9017	8788	8546	8288	8009	7699	6932	
	8 BLADES	THB-24E832	1/3	813	0.32	76	5223	4605									
		THB-24E832	1/2	933	0.50	80	5993	5484	4750								
		THB-24E832	3/4	1068	0.75	84	6861	6430	5880	5119							
		THB-24E832	1	1176	1.00	86	7554	7170	6710	6108							
		THB-24E832	1½	1346	1.50	89	8646	8317	7944	7500	6950						
		THB-24E832	2	1481	2.00	92	9514	9217	8890	8520	8081	7562					
		THB-24E832	3	1695	3.00	95	10888	10632	10357	10058	9727	9347	8913	8433			

NOTES:
1. Performance certified is for installation Type A: Free inlet, free outlet.
2. Power rating (BHP) does not include transmission losses.
3. Performance ratings do not include the effects of appurtenances (accessories).
4. The sound power ratings shown are in decibels, referred to 10^{-12} watts calculated per AMCA Standard 301.
5. Values shown are for inlet LwiA sound power levels for installation Type A: Free inlet, free outlet. Ratings do not include the effects of end correction.
6. Sound power values shown are at the peak cataloged pressure for each RPM.

Performance Data – Belt Driven

THB – Die Cast Aluminum Propeller

SIZE	NO. OF BLADES	PROP	MOTOR HP	FAN RPM	MAX. BHP	LwiA	STATIC PRESSURE (IN. W.G.)										
							0.000	0.125	0.250	0.375	0.500	0.625	0.750	0.875	1.000	1.250	1.500
							CFM	CFM	CFM	CFM	CFM	CFM	CFM	CFM	CFM	CFM	CFM
30	4 BLADES	THB-30E432	1/2	699	0.50	76	8284	7143	5630								
		THB-30E424	1/2	809	0.50	80	7820	7003	5837								
		THB-30E416	1/2	963	0.50	85	6999	6249	5401	4141							
		THB-30E432	3/4	800	0.75	80	9482	8524	7368								
		THB-30E424	3/4	926	0.75	84	8950	8272	7324	6245							
		THB-30E416	3/4	1102	0.75	89	8009	7353	6694	5793	4648						
		THB-30E432	1	881	1.00	82	10442	9591	8562	7398							
		THB-30E424	1	1019	1.00	86	9849	9246	8458	7521	6454						
		THB-30E416	1	1213	1.00	92	8815	8221	7629	6951	6024	4928					
		THB-30E432	1½	1008	1.50	86	11947	11218	10373	9446	8363						
		THB-30E424	1½	1166	1.50	91	11270	10755	10148	9362	8545	7628					
		THB-30E416	1½	1389	1.50	96	10095	9577	9055	8536	7911	7108	6205	5123			
		THB-30E432	2	1110	2.00	89	13156	12501	11768	10937	10095	9004					
		THB-30E424	2	1284	2.00	93	12411	11949	11426	10785	10042	9294	8457				
		THB-30E416	2	1529	2.00	99	11112	10643	10167	9700	9211	8605	7869	7062	6155		
		THB-30E432	3	1270	3.00	93	15052	14486	13876	13196	12459	11727	10907				
		THB-30E424	3	1469	3.00	97	14199	13800	13365	12879	12293	11639	10996	10316	9560		
		THB-30E416	3	1750	3.00	102	12718	12309	11895	11479	11073	10650	10163	9569	8913	7452	
		THB-30E432	5	1506	5.01	97	17849	17377	16880	16352	15779	15166	14540	13925	13267		
		THB-30E424	5	1742	5.00	101	16838	16505	16153	15776	15368	14902	14373	13819	13279	12137	10806
		THB-30E416	5	2074	5.00	107	15073	14728	14380	14030	13679	13335	12991	12631	12233	11249	10119
	8 BLADES	THB-30E832	1/2	603	0.48	77	7703	6815									
		THB-30E832	3/4	690	0.74	81	8814	8062	7106								
		THB-30E832	1	760	1.00	82	9709	9038	8240	7150							
		THB-30E832	1½	869	1.49	86	11101	10525	9874	9103	8053						
		THB-30E832	2	957	1.99	90	12225	11707	11136	10496	9732						
		THB-30E832	3	1095	3.00	93	13988	13540	13060	12538	11966	11304	10533				
		THB-30E832	5	1299	5.00	97	16594	16220	15828	15414	14975	14508	14001	13431	12812		
36	4 BLADES	THB-36E432	3/4	667	0.74	80	12356	10832	8604								
		THB-36E428	3/4	717	0.75	80	12121	10707	8910								
		THB-36E420	3/4	865	0.75	87	11090	9886	8386	6607							
		THB-36E432	1	734	1.00	82	13597	12221	10557								
		THB-36E428	1	789	1.00	83	13338	12076	10568								
		THB-36E420	1	952	1.00	89	12206	11135	9839	8354							
		THB-36E432	1½	840	1.50	86	15561	14365	13090	11288							
		THB-36E428	1½	903	1.50	86	15265	14183	12953	11523							
		THB-36E420	1½	1089	1.50	93	13962	13045	11984	10777	9457	7785					
		THB-36E432	2	924	2.00	89	17117	16036	14912	13566	11445						
		THB-36E428	2	994	2.00	89	16803	15831	14755	13536	12054						
		THB-36E420	2	1199	1.99	96	15373	14548	13626	12581	11437	10227	8703				
		THB-36E432	3	1058	3.00	92	19599	18662	17691	16678	15441	13722					
		THB-36E428	3	1138	3.00	93	19237	18398	17494	16508	15422	14198					
		THB-36E420	3	1373	3.01	101	17604	16892	16123	15271	14344	13351	12302	11214	9714		
		THB-36E432	5	1254	5.00	97	23230	22444	21633	20812	19961	18995	17830	16310			
		THB-36E428	5	1349	5.00	98	22804	22103	21366	20586	19755	18862	17922	16863			
		THB-36E420	5	1627	5.00	105	20860	20266	19640	18975	18256	17487	16686	15840	14956	13118	
		THB-36E432	7½	1435	7.50	103	26583	25899	25198	24482	23764	23025	22224	21305	20240	16981	
		THB-36E428	7½	1544	7.50	101	26101	25491	24859	24200	23512	22790	22028	21221	20394		
		THB-36E420	7½	1863	7.49	108	23886	23370	22834	22274	21687	21062	20402	19717	19011	17506	15947
	8 BLADES	THB-36E832	3/4	578	0.73	80	11548	10384	8159								
		THB-36E832	1	636	1.00	81	12707	11681	10205								
		THB-36E832	1½	728	1.49	87	14545	13677	12595	10802							
		THB-36E832	2	801	2.00	90	16003	15227	14310	13120	10788						
		THB-36E832	3	917	3.00	93	18321	17655	16905	16034	14932	13030					
		THB-36E832	5	1087	5.01	98	21717	21164	20566	19910	19177	18328	17239	15500			
		THB-36E832	7½	1244	7.50	99	24854	24375	23867	23326	22743	22108	21404	20591	19559		

NOTES:
1. Performance certified is for installation Type A: Free inlet, free outlet.
2. Power rating (BHP) does not include transmission losses.
3. Performance ratings do not include the effects of appurtenances (accessories).
4. The sound power ratings shown are in decibels, referred to 10^{-12} watts calculated per AMCA Standard 301.
5. Values shown are for inlet LwiA sound power levels for installation Type A: Free inlet, free outlet. Ratings do not include the effects of end correction.
6. Sound power values shown are at the peak cataloged pressure for each RPM.

Performance Data – Belt Driven

THB – Die Cast Aluminum Propeller

SIZE	NO. OF BLADES	PROP	MOTOR HP	FAN RPM	MAX. BHP	LwiA	STATIC PRESSURE (IN. W.G.)										
							0.000	0.125	0.250	0.375	0.500	0.625	0.750	0.875	1.000	1.250	1.500
							CFM	CFM	CFM	CFM	CFM	CFM	CFM	CFM	CFM	CFM	CFM
42	4 BLADES	THB-42E432	1	518	0.99	77	16024	13852									
		THB-42E428	1	554	1.00	80	15642	13758	11164								
		THB-42E420	1	654	1.00	85	14485	12940	11014								
		THB-42E432	1½	593	1.50	81	18344	16504	14327								
		THB-42E428	1½	634	1.50	83	17901	16263	14395								
		THB-42E420	1½	749	1.51	88	16589	15288	13685	11880							
		THB-42E432	2	653	2.00	84	20200	18559	16649	14264							
		THB-42E428	2	698	2.00	86	19708	18220	16656	14534							
		THB-42E420	2	824	2.00	91	18250	17087	15697	14160	12309						
		THB-42E432	3	748	3.01	88	23139	21733	20146	18408	16150						
		THB-42E428	3	799	3.00	89	22559	21260	19951	18449	16482						
		THB-42E420	3	943	3.00	95	20886	19886	18756	17457	16105	14532					
		THB-42E432	5	886	5.00	92	27408	26239	24971	23586	22120	20483					
		THB-42E428	5	947	5.01	94	26738	25647	24545	23428	22169	20645	18748				
		THB-42E420	5	1118	5.00	100	24762	23931	23036	22040	20941	19814	18637	17271			
		THB-42E432	7½	1014	7.50	96	31367	30354	29282	28131	26904	25626	24283	22627			
		THB-42E428	7½	1084	7.51	98	30606	29656	28690	27732	26747	25663	24407	22950	21188		
		THB-42E420	7½	1280	7.50	103	28350	27630	26870	26059	25171	24214	23231	22239	21190	18610	
		THB-42E432	10	1116	10.00	99	34522	33607	32648	31635	30561	29432	28270	27068	25698		
		THB-42E428	10	1193	10.01	101	33684	32821	31946	31072	30199	29293	28303	27184	25921	22734	
		THB-42E420	10	1408	10.00	106	31184	30534	29853	29138	28376	27552	26680	25787	24891	22983	20608
	8 BLADES	THB-42E832	1	448	0.97	77	15032	13327									
		THB-42E832	1½	513	1.50	81	17213	15776	13894								
		THB-42E832	2	564	1.97	84	18924	17641	16083								
		THB-42E832	3	646	2.99	88	21675	20578	19325	17798							
		THB-42E832	5	765	5.00	93	25668	24757	23762	22658	21376	19807					
		THB-42E832	7½	876	7.49	96	29393	28605	27764	26860	25878	24775	23498				
		THB-42E832	10	964	10.01	99	32345	31633	30883	30088	29242	28330	27323	26183	24870		
48	4 BLADES	THB-48E432	1½	520	1.49	82	22134	19634	16000								
		THB-48E428	1½	559	1.50	82	21795	19426	16496								
		THB-48E420	1½	675	1.49	89	20081	18048	15588	12791							
		THB-48E432	2	572	2.00	83	24347	22096	19310								
		THB-48E428	2	616	2.01	84	24017	21903	19430								
		THB-48E420	2	743	2.01	91	22104	20294	18153	15735	12802						
		THB-48E432	3	655	2.99	87	27880	25924	23797	20851							
		THB-48E428	3	705	3.01	88	27487	25672	23631	21309							
		THB-48E420	3	850	3.00	95	25288	23737	21961	19989	17841	15440					
		THB-48E432	5	777	5.01	94	33073	31429	29748	27840	25395	21496					
		THB-48E428	5	835	5.00	93	32556	31046	29416	27625	25685						
		THB-48E420	5	1008	5.00	100	29988	28702	27298	25743	24085	22302	20466	18390			
		THB-48E432	7½	889	7.52	96	37841	36409	34956	33445	31716	29625	26835				
		THB-48E428	7½	956	7.51	97	37273	35967	34583	33108	31516	29839	27864				
		THB-48E420	7½	1153	7.50	104	34302	33188	32004	30720	29341	27899	26369	24776	23164	18795	
		THB-48E432	10	978	10.01	100	41629	40332	39011	37675	36250	34614	32699	30308	26719		
		THB-48E428	10	1052	10.00	99	41016	39834	38597	37295	35917	34445	32922	31208			
		THB-48E420	10	1269	9.99	107	37753	36746	35688	34565	33361	32093	30782	29402	27967	25022	20999
	8 BLADES	THB-48E832	1½	451	1.47	82	20921	18915	15309								
		THB-48E832	2	496	2.00	83	23009	21236	18734								
		THB-48E832	3	568	2.98	88	26349	24847	22998	20069							
		THB-48E832	5	673	4.99	92	31220	29984	28576	26896	24505						
		THB-48E832	7½	771	7.53	97	35766	34702	33534	32228	30708	28727	25612				
		THB-48E832	10	848	10.01	100	39338	38378	37344	36216	34965	33525	31703	29010			

NOTES:
1. Performance certified is for installation Type A: Free inlet, free outlet.
2. Power rating (BHP) does not include transmission losses.
3. Performance ratings do not include the effects of appurtenances (accessories).
4. The sound power ratings shown are in decibels, referred to 10^{-12} watts calculated per AMCA Standard 301.
5. Values shown are for inlet LwiA sound power levels for installation Type A: Free inlet, free outlet. Ratings do not include the effects of end correction.
6. Sound power values shown are at the peak cataloged pressure for each RPM.

Performance Data – Belt Driven

THB – Cast Aluminum Propeller

SIZE	NO. OF BLADES	PROP	MOTOR HP	FAN RPM	MAX. BHP	LwiA	STATIC PRESSURE (IN. W.G.)										
							0.000	0.125	0.250	0.375	0.500	0.625	0.750	0.875	1.000	1.250	1.500
							CFM	CFM	CFM	CFM	CFM	CFM	CFM	CFM	CFM	CFM	CFM
54	6 BLADES	THB-54C625	1½	395	1.51	73	25860	21858									
		THB-54C620	1½	441	1.50	78	25344	21478	16044								
		THB-54C610	1½	543	1.47	84	23205	20469	17331	12852							
		THB-54C625	2	434	2.00	79	28413	24937	19815								
		THB-54C620	2	485	2.00	79	27873	24422	20328								
		THB-54C610	2	598	2.00	86	25555	23208	20238	17036							
		THB-54C625	3	497	3.00	81	32538	29580	25480								
		THB-54C620	3	555	3.00	84	31896	28977	25662	21107							
		THB-54C610	3	684	3.00	90	29230	27287	24629	22258	19208						
		THB-54C625	5	589	5.00	86	38561	36088	33357	29393							
		THB-54C620	5	658	5.01	88	37815	35443	32682	29881	26111						
		THB-54C610	5	811	5.01	96	34658	33072	31113	28794	26822	24601	21590				
		THB-54C625	7½	675	7.53	92	44191	42036	39814	37095	33472	30256					
		THB-54C620	7½	753	7.51	93	43275	41245	38928	36469	34012	30879	26812				
		THB-54C610	7½	928	7.49	100	39658	38296	36755	34815	32817	31096	29316	27033	24311		
		THB-54C625	10	742	10.00	94	48578	46617	44634	42450	39595	36286	33397				
		THB-54C620	10	829	10.03	96	47643	45818	43784	41567	39353	37082	34211	30382			
		THB-54C610	10	1022	9.97	102	43675	42450	41106	39524	37654	35899	34344	32762	30875	26009	
		THB-54C625	15	850	15.04	98	55648	53938	52223	50453	48496	46062	43133	40477	37889		
		THB-54C620	15	949	15.04	98	54539	52960	51260	49402	47449	45512	43578	41463	38730		
		THB-54C610	15	1170	15.03	105	49999	48940	47807	46579	45142	43509	41902	40480	39135	36210	32208
60	6 BLADES	THB-60C625	2	393	2.01	79	32228	27095									
		THB-60C620	2	428	2.00	80	31766	27660									
		THB-60C610	2	538	2.00	86	29969	26459	22312	17011							
		THB-60C625	3	449	3.00	83	36820	32405	27161								
		THB-60C620	3	490	3.01	86	36367	32827	28612								
		THB-60C610	3	616	3.01	90	34314	31297	27917	24012	19054						
		THB-60C625	5	533	5.01	88	43709	40076	36103	31131							
		THB-60C620	5	581	5.01	91	43121	40129	37011	33086							
		THB-60C610	5	730	5.01	95	40664	38155	35457	32490	29196	25512	20306				
		THB-60C625	7½	610	7.53	93	50023	46895	43484	39934	35209						
		THB-60C620	7½	665	7.53	95	49355	46727	44129	41177	37580						
		THB-60C610	7½	835	7.49	99	46513	44337	42043	39601	36957	34092	31012	27412			
		THB-60C625	10	671	10.01	96	55025	52206	49165	45992	42582						
		THB-60C620	10	731	10.00	98	54254	51855	49510	47020	44141	40649					
		THB-60C610	10	919	10.00	101	51193	49224	47169	45015	42733	40285	37673	34910	31870		
		THB-60C625	15	768	15.02	99	62980	60540	57949	55222	52447	49523	45851				
		THB-60C620	15	837	15.02	102	62121	60020	57964	55901	53681	51190	48378	44778			
		THB-60C610	15	1052	14.98	105	58601	56890	55123	53295	51396	49412	47319	45112	42802	37821	31248
		THB-60C625	20	845	20.00	101	69294	67088	64769	62340	59824	57305	54640	51416			
		THB-60C620	20	921	20.00	104	68355	66447	64563	62707	60797	58726	56455	53955	51005		
		THB-60C610	20	1158	20.00	108	64506	62956	61364	59728	58044	56304	54498	52612	50638	46456	41915
		THB-60C625	25	911	25.07	104	74706	72667	70539	68320	66022	63677	61333	58838	55879		
		THB-60C620	25	993	25.07	106	73699	71929	70172	68450	66713	64903	62933	60813	58510	52568	
		THB-60C610	25	1248	25.04	110	69519	68084	66615	65111	63571	61990	60362	58681	56934	53233	49289

NOTES:

1. Performance certified is for installation Type A: Free inlet, free outlet.
2. Power rating (BHP) does not include transmission losses.
3. Performance ratings do not include the effects of appurtenances (accessories).
4. The sound power ratings shown are in decibels, referred to 10^{-12} watts calculated per AMCA Standard 301.
5. Values shown are for inlet LwiA sound power levels for installation Type A: Free inlet, free outlet. Ratings do not include the effects of end correction.
6. Sound power values shown are at the peak cataloged pressure for each RPM.

Performance Data – Belt Driven

THB – Fabricated Steel Propeller

SIZE	PROP	MOTOR HP	FAN RPM	MAX. BHP	LwiA	STATIC PRESSURE (IN. W.G.)										
						0.000	0.125	0.250	0.375	0.500	0.625	0.750	0.875	1.000	1.250	1.500
						CFM	CFM	CFM	CFM	CFM	CFM	CFM	CFM	CFM	CFM	CFM
24	THB-24Z545	1/3	749	0.33	75	5609	4777									
	THB-24Z535	1/3	873	0.33	78	5159	4690	3926								
	THB-24Z545	1/2	861	0.50	79	6447	5707									
	THB-24Z535	1/2	1003	0.49	81	5927	5538	4972								
	THB-24Z545	3/4	985	0.75	83	7376	6700	6062								
	THB-24Z535	3/4	1148	0.74	85	6784	6454	6042	5450							
	THB-24Z545	1	1084	1.00	85	8117	7487	6969								
	THB-24Z535	1	1264	1.00	87	7470	7175	6828	6365	5797						
	THB-24Z545	2	1366	2.00	91	10229	9717	9261	8858	8265						
	THB-24Z535	2	1592	2.00	93	9408	9180	8930	8652	8323	7909	7455	6982			
	THB-24Z545	3	1563	3.00	95	11704	11253	10827	10463	10109	9644					
	THB-24Z535	3	1822	2.97	96	10767	10570	10359	10132	9883	9601	9262	8872	8477		
30	THB-30Z545	1/2	664	0.50	79	8590	7059									
	THB-30Z535	1/2	791	0.50	80	8055	7219	6088								
	THB-30Z545	3/4	761	0.75	82	9845	8631									
	THB-30Z535	3/4	906	0.75	84	9226	8523	7616	6466							
	THB-30Z545	1	837	0.99	85	10828	9777									
	THB-30Z535	1	997	0.99	87	10152	9525	8759	7848							
	THB-30Z545	1½	958	1.50	88	12393	11517	10304								
	THB-30Z535	1½	1141	1.49	90	11619	11081	10467	9729	8922						
	THB-30Z545	2	1055	2.00	91	13648	12869	11876	10539							
	THB-30Z535	2	1256	1.99	93	12790	12306	11771	11153	10444	9701					
	THB-30Z545	3	1207	3.00	94	15615	14949	14168	13180	11951						
	THB-30Z535	3	1437	3.00	96	14633	14215	13765	13274	12717	12100	11463	10762			
	THB-30Z545	5	1431	5.00	99	18512	17962	17354	16657	15826	14858					
	THB-30Z535	5	1704	5.00	101	17352	17003	16636	16248	15835	15383	14890	14364	13828	12653	
36	THB-36Z545	3/4	561	0.75	79	12503	10342									
	THB-36Z535	3/4	668	0.75	82	11732	10548	8960								
	THB-36Z545	1	618	1.00	82	13773	11942									
	THB-36Z535	1	736	0.98	84	12926	11881	10518								
	THB-36Z545	1½	707	1.49	86	15757	14266	11952								
	THB-36Z535	1½	842	1.49	88	14788	13898	12818	11535							
	THB-36Z545	2	778	1.99	89	17339	16030	14176								
	THB-36Z535	2	927	2.00	90	16281	15483	14563	13451	12241						
	THB-36Z545	3	891	3.00	92	19858	18751	17348	15482							
	THB-36Z535	3	1061	3.00	93	18634	17948	17191	16320	15324	14282	12909				
	THB-36Z545	5	1056	5.00	96	23535	22627	21580	20292	18726						
	THB-36Z535	5	1257	5.00	98	22076	21504	20894	20235	19501	18684	17820	16937	15887		
	THB-36Z545	7½	1209	7.51	100	26945	26163	25300	24315	23146	21790					
	THB-36Z535	7½	1439	7.49	102	25273	24777	24256	23707	23123	22487	21793	21054	20296	18678	
42	THB-42Z545	1	448	1.00	77	16715	14115									
	THB-42Z530	1	593	0.99	84	14925	13630	11842								
	THB-42Z545	1½	513	1.50	81	19140	17033									
	THB-42Z530	1½	679	1.50	88	17089	16001	14549	12971							
	THB-42Z545	2	564	1.99	84	21043	19185									
	THB-42Z530	2	748	2.01	91	18826	17856	16654	15190	13695						
	THB-42Z545	3	646	3.01	87	24102	22530	20547								
	THB-42Z530	3	856	3.00	94	21544	20712	19764	18575	17297	16037					
	THB-42Z545	5	765	4.99	91	28542	27250	25769	23925							
	THB-42Z530	5	1014	4.99	99	25521	24830	24079	23238	22233	21132	20095	19016	17439		
	THB-42Z545	7½	876	7.49	94	32683	31572	30345	28960	27273						
	THB-42Z530	7½	1161	7.51	103	29220	28623	27988	27305	26553	25683	24728	23782	22889	20769	
	THB-42Z545	10	964	10.00	97	35967	34965	33880	32694	31352	29745					
	THB-42Z530	10	1278	10.01	105	32165	31625	31058	30458	29818	29115	28321	27458	26584	24944	23014

NOTES:
1. Performance certified is for installation Type A: Free inlet, free outlet.
2. Power rating (BHP) does not include transmission losses.
3. Performance ratings do not include the effects of appurtenances (accessories).
4. The sound power ratings shown are in decibels, referred to 10^{-12} watts calculated per AMCA Standard 301.
5. Values shown are for inlet LwiA sound power levels for installation Type A: Free inlet, free outlet. Ratings do not include the effects of end correction.
6. Sound power values shown are at the peak cataloged pressure for each RPM.

Performance Data – Belt Driven

THB – Fabricated Steel Propeller

SIZE	PROP	MOTOR HP	FAN RPM	MAX. BHP	LwiA	STATIC PRESSURE (IN. W.G.)										
						0.000	0.125	0.250	0.375	0.500	0.625	0.750	0.875	1.000	1.250	1.500
						CFM	CFM	CFM	CFM	CFM	CFM	CFM	CFM	CFM	CFM	CFM
48	THB-48Z545	1½	438	1.49	80	22319	18567									
	THB-48Z535	1½	521	1.49	83	21225	19194	16586								
	THB-48Z545	2	482	2.00	83	24561	21320									
	THB-48Z535	2	574	1.97	86	23384	21592	19321								
	THB-48Z545	3	552	3.01	87	28128	25469									
	THB-48Z535	3	657	2.98	89	26765	25240	23405	21312							
	THB-48Z545	5	654	4.99	92	33325	31202	28442								
	THB-48Z535	5	779	5.01	94	31735	30476	29065	27427	25662	23707					
	THB-48Z545	7½	749	7.52	95	38166	36366	34179	31537							
	THB-48Z535	7½	891	7.50	97	36298	35210	34034	32720	31256	29712	28111	26074			
	THB-48Z545	10	824	10.01	98	41987	40377	38497	36261	33686						
	THB-48Z535	10	981	10.01	100	39964	38983	37938	36807	35557	34203	32799	31366	29723		
54	THB-54Z545	1½	331	1.49	76	26024	21255									
	THB-54Z530	1½	435	1.50	84	23533	21115	18171								
	THB-54Z545	2	364	2.00	79	28619	24779									
	THB-54Z530	2	478	1.98	86	25859	23687	21168	17371							
	THB-54Z545	3	417	3.02	83	32786	29644									
	THB-54Z530	3	548	2.99	90	29646	27779	25721	23351							
	THB-54Z545	5	494	4.99	87	38840	36235	32942								
	THB-54Z530	5	649	5.01	94	35110	33555	31894	30097	28097	25675					
	THB-54Z545	7½	565	7.51	91	44422	42146	39729								
	THB-54Z530	7½	743	7.49	98	40196	38847	37430	35939	34343	32605	30696	28012			
	THB-54Z545	10	622	10.00	93	48903	46832	44730	42078							
	THB-54Z530	10	818	10.02	100	44253	43034	41763	40439	39054	37578	35994	34301	32219		
	THB-54Z545	15	712	15.02	97	55980	54165	52367	50440	47962						
	THB-54Z530	15	936	15.01	103	50637	49576	48482	47353	46188	44981	43719	42382	40982	37827	
60	THB-60Z545	2	322	1.98	79	33044	27106									
	THB-60Z530	2	427	1.99	85	30053	27226	23486								
	THB-60Z545	3	369	3.02	83	37867	33092									
	THB-60Z530	3	489	3.01	89	34416	32053	28962	25521							
	THB-60Z545	5	437	5.00	87	44845	41077									
	THB-60Z530	5	580	5.01	94	40821	38887	36588	33830	30979	27011					
	THB-60Z545	7½	500	7.51	87	51311	48128	44092								
	THB-60Z530	7½	664	7.52	98	46733	45071	43215	41005	38564	36105	33138				
	THB-60Z545	10	550	10.01	94	56442	53600	50192	45895							
	THB-60Z530	10	730	10.01	100	51378	49880	48246	46392	44257	42034	39795	37211	33654		
	THB-60Z545	15	630	15.04	97	64651	62218	59453	56195	52288						
	THB-60Z530	15	836	14.98	104	58839	57542	56162	54677	53013	51160	49212	47287	45305	40261	
	THB-60Z545	20	693	20.01	100	71117	68927	66504	63764	60580	56836					
	THB-60Z545	25	747	25.08	102	76658	74639	72444	70017	67280	64174					

NOTES:
1. Performance certified is for installation Type A: Free inlet, free outlet.
2. Power rating (BHP) does not include transmission losses.
3. Performance ratings do not include the effects of appurtenances (accessories).
4. The sound power ratings shown are in decibels, referred to 10^{-12} watts calculated per AMCA Standard 301.
5. Values shown are for inlet LwiA sound power levels for installation Type A: Free inlet, free outlet. Ratings do not include the effects of end correction.
6. Sound power values shown are at the peak cataloged pressure for each RPM.

Performance Data – Direct Drive

THD – Die Cast Aluminum Propeller

SIZE	NO. OF BLADES	PROP	MOTOR HP	FAN RPM	MAX. BHP	LwiA	STATIC PRESSURE (IN. W.G.)										
							0.000	0.125	0.250	0.375	0.500	0.625	0.750	0.875	1.000	1.250	1.500
							CFM	CFM	CFM	CFM	CFM	CFM	CFM	CFM	CFM	CFM	CFM
14	4 BLADES	THD-14E416	1/4	1160	0.04	71	1039										
		THD-14E420	1/4	1160	0.06	69	1178	867									
		THD-14E424	1/4	1160	0.07	71	1317	1009									
		THD-14E428	1/4	1160	0.08	72	1411	1096									
		THD-14E432	1/4	1160	0.09	70	1539	1183									
		THD-14E416	1/4	1750	0.16	80	1568	1385	1125								
		THD-14E420	1/4	1750	0.19	82	1777	1594	1383								
		THD-14E424	1/4	1750	0.23	83	1987	1803	1596								
		THD-14E428	1/4	1750	0.26	84	2129	1957	1732								
	8 BLADES	THD-14E816	1/4	1160	0.05	74	977										
		THD-14E820	1/4	1160	0.07	74	1134	875									
		THD-14E824	1/4	1160	0.09	76	1312	1068									
		THD-14E828	1/4	1160	0.10	76	1438	1175									
		THD-14E832	1/4	1160	0.12	77	1570	1275									
		THD-14E816	1/4	1750	0.20	84	1473	1330	1128								
		THD-14E820	1/4	1750	0.24	86	1711	1594	1394								
		THD-14E824	1/3	1750	0.29	88	1979	1838	1670								
		THD-14E828	1/3	1750	0.34	89	2170	2021	1837								
		THD-14E832	1/2	1750	0.40	89	2369	2214	2005								
16	4 BLADES	THD-16E416	1/4	1160	0.07	72	1485	1120									
		THD-16E420	1/4	1160	0.08	72	1705	1347									
		THD-16E424	1/4	1160	0.10	73	1905	1560									
		THD-16E428	1/4	1160	0.12	73	2078	1729									
		THD-16E432	1/4	1160	0.15	72	2271	1891									
		THD-16E416	1/4	1750	0.24	83	2240	2049	1791								
		THD-16E420	1/3	1750	0.29	83	2572	2359	2113	1756							
		THD-16E424	1/3	1750	0.36	83	2873	2682	2436	2111							
		THD-16E428	1/2	1750	0.42	84	3136	2929	2686	2360							
		THD-16E432	1/2	1750	0.50	84	3427	3221	2950	2581							
	8 BLADES	THD-16E816	1/4	1160	0.09	75	1452	1169									
		THD-16E820	1/4	1160	0.11	75	1683	1428									
		THD-16E824	1/4	1160	0.14	75	1941	1694									
		THD-16E828	1/4	1160	0.17	75	2165	1905									
		THD-16E832	1/4	1160	0.20	76	2400	2110									
		THD-16E816	1/3	1750	0.31	86	2190	2024	1828								
		THD-16E820	1/2	1750	0.39	87	2539	2401	2221	1945							
		THD-16E824	1/2	1750	0.48	88	2928	2786	2613	2372							
		THD-16E828	3/4	1750	0.58	88	3266	3112	2931	2700							
		THD-16E832	3/4	1750	0.69	89	3621	3450	3248	2984							
18	4 BLADES	THD-18E412	1/4	1160	0.07	75	1725	1282									
		THD-18E416	1/4	1160	0.10	75	2037	1665									
		THD-18E420	1/4	1160	0.12	74	2361	1950									
		THD-18E424	1/4	1160	0.15	75	2639	2272									
		THD-18E428	1/4	1160	0.18	75	2917	2522									
		THD-18E432	1/4	1160	0.22	75	3192	2780									
		THD-18E412	1/4	1750	0.25	84	2602	2351	2046	1641							
		THD-18E416	1/3	1750	0.33	86	3073	2867	2602	2204							
		THD-18E420	1/2	1750	0.41	85	3562	3326	3035	2678							
		THD-18E424	1/2	1750	0.51	85	3981	3780	3522	3151							
		THD-18E428	3/4	1750	0.62	86	4401	4157	3885	3565	3088						
		THD-18E432	3/4	1750	0.76	86	4815	4583	4295	3897	3460						
	8 BLADES	THD-18E812	1/4	1160	0.10	75	1657	1320									
		THD-18E816	1/4	1160	0.13	77	2055	1746									
		THD-18E820	1/4	1160	0.16	77	2380	2112									
		THD-18E824	1/4	1160	0.21	78	2740	2490	2038								
		THD-18E828	1/4	1160	0.27	77	3093	2825	2386								
		THD-18E832	1/3	1160	0.33	77	3465	3159	2697								
		THD-18E812	1/2	1750	0.36	86	2500	2304	2061	1812	1554						
		THD-18E816	1/2	1750	0.46	87	3099	2909	2697	2450	2118						
		THD-18E820	3/4	1750	0.58	89	3591	3434	3248	2993	2642						
		THD-18E824	3/4	1750	0.73	89	4133	3985	3811	3586	3274						
		THD-18E828	1	1750	0.93	89	4666	4502	4318	4104	3835						

NOTES:
1. Performance certified is for installation Type A: Free inlet, free outlet.
2. Performance ratings do not include the effects of appurtenances (accessories).
3. The sound power ratings shown are in decibels, referred to 10^{-12} watts calculated per AMCA Standard 301.
4. Values shown are for inlet LwiA sound power levels for installation Type A: Free inlet, free outlet. Ratings do not include the effects of end correction.
5. Sound power values shown are at the peak cataloged pressure for each RPM.

Performance Data – Direct Drive

THD – Die Cast Aluminum Propeller

SIZE	NO. OF BLADES	PROP	MOTOR HP	FAN RPM	MAX. BHP	LwiA	STATIC PRESSURE (IN. W.G.)										
							0.000	0.125	0.250	0.375	0.500	0.625	0.750	0.875	1.000	1.250	1.500
							CFM	CFM	CFM	CFM	CFM	CFM	CFM	CFM	CFM	CFM	CFM
21	4 BLADES	THD-21E412	1/4	1160	0.11	79	2401	1845									
		THD-21E416	1/4	1160	0.14	78	2915	2446									
		THD-21E420	1/4	1160	0.18	77	3415	2908									
		THD-21E424	1/4	1160	0.24	77	3905	3408	2693								
		THD-21E428	1/3	1160	0.30	78	4309	3818	3161								
		THD-21E432	1/2	1160	0.37	79	4742	4218	3511								
		THD-21E412	1/2	1750	0.36	89	3622	3294	2906	2447							
		THD-21E416	1/2	1750	0.50	90	4398	4120	3793	3375	2774						
		THD-21E420	3/4	1750	0.63	90	5151	4819	4484	4097	3559						
		THD-21E424	1	1750	0.83	87	5891	5586	5244	4850	4406						
		THD-21E428	1	1750	1.04	89	6501	6179	5850	5511	5078	4483					
		THD-21E432	1½	1750	1.29	90	7153	6830	6471	6062	5595	5027					
	8 BLADES	THD-21E812	1/4	1160	0.17	79	2318	1948	1518								
		THD-21E816	1/4	1160	0.22	81	2924	2586	2145								
		THD-21E820	1/3	1160	0.28	82	3490	3167	2707								
		THD-21E824	1/3	1160	0.36	81	4063	3762	3360								
		THD-21E828	1/2	1160	0.46	81	4627	4302	3904	3021							
		THD-21E832	3/4	1160	0.57	80	5182	4844	4427								
		THD-21E812	3/4	1750	0.57	91	3496	3272	3016	2742	2469	2132					
		THD-21E816	3/4	1750	0.74	92	4410	4199	3968	3713	3420						
		THD-21E820	1	1750	0.96	93	5264	5066	4844	4587	4278	3904	3309				
		THD-21E824	1½	1750	1.24	92	6130	5942	5736	5506	5240	4912					
		THD-21E828	1½	1750	1.59	92	6981	6776	6554	6314	6052	5738	5210				
24	4 BLADES	THD-24E412	1/4	860	0.05	73	2406	1354									
		THD-24E416	1/4	860	0.08	75	2997	2050									
		THD-24E420	1/4	860	0.10	75	3558	2611									
		THD-24E424	1/4	860	0.14	73	4148	3227									
		THD-24E428	1/4	860	0.18	72	4598	3756									
		THD-24E432	1/4	860	0.24	74	5086	4163									
		THD-24E412	1/4	1160	0.13	81	3246	2530									
		THD-24E416	1/4	1160	0.19	83	4042	3450	2563								
		THD-24E420	1/4	1160	0.25	83	4799	4153	3330								
		THD-24E424	1/3	1160	0.35	80	5595	4925	4209								
		THD-24E428	1/2	1160	0.46	81	6201	5572	4928								
		THD-24E432	3/4	1160	0.58	81	6861	6199	5464								
		THD-24E412	1/2	1750	0.45	93	4896	4474	3958	3440	2847						
		THD-24E416	3/4	1750	0.65	94	6098	5730	5325	4859	4269						
		THD-24E420	1	1750	0.88	94	7239	6772	6368	5976	5410	4670					
		THD-24E424	1½	1750	1.21	90	8441	7990	7549	7117	6639	6081					
		THD-24E428	1½	1750	1.57	92	9355	8931	8516	8126	7709	7183	6508				
		THD-24E432	2	1750	2.00	94	10350	9918	9474	9028	8547	7974	7275				
	8 BLADES	THD-24E812	1/4	860	0.09	76	2323	1754									
		THD-24E816	1/4	860	0.12	77	2982	2440									
		THD-24E820	1/4	860	0.16	78	3658	3101									
		THD-24E824	1/4	860	0.22	76	4307	3800									
		THD-24E828	1/3	860	0.28	76	4953	4408									
		THD-24E832	1/2	860	0.38	75	5559	5035	4192								
		THD-24E812	1/4	1160	0.23	84	3133	2728	2285								
		THD-24E816	1/3	1160	0.32	84	4022	3656	3201	2536							
		THD-24E820	1/2	1160	0.42	86	4933	4550	4092	3466							
		THD-24E824	3/4	1160	0.56	86	5809	5450	5051	4516							
		THD-24E828	3/4	1160	0.73	85	6681	6297	5865	5315							
		THD-24E832	1	1160	0.92	83	7499	7133	6709	6188							
		THD-24E812	3/4	1750	0.79	95	4727	4471	4196	3897	3608	3298					
		THD-24E816	1	1750	1.09	96	6068	5838	5589	5315	5010	4676	4291				
		THD-24E820	1½	1750	1.45	97	7443	7199	6940	6660	6355	6015	5617	5141			
		THD-24E824	2	1750	1.92	98	8764	8533	8290	8035	7770	7493	7174	6717			
		THD-24E828	3	1750	2.50	95	10080	9833	9574	9300	9011	8710	8371	7928			
		THD-24E832	3	1750	3.17	94	11313	11079	10832	10568	10286	9983	9651	9261	8730		

NOTES:
1. Performance certified is for installation Type A: Free inlet, free outlet.
2. Performance ratings do not include the effects of appurtenances (accessories).
3. The sound power ratings shown are in decibels, referred to 10^{-12} watts calculated per AMCA Standard 301.
4. Values shown are for inlet LwiA sound power levels for installation Type A: Free inlet, free outlet. Ratings do not include the effects of end correction.
5. Sound power values shown are at the peak cataloged pressure for each RPM.

Performance Data – Direct Drive

THD – Die Cast Aluminum Propeller

SIZE	NO. OF BLADES	CATALOG NUMBER	MOTOR HP	FAN RPM	MAX. BHP	LwiA	STATIC PRESSURE (IN. W.G.)										
							0.000	0.125	0.250	0.375	0.500	0.625	0.750	0.875	1.000	1.250	1.500
							CFM	CFM	CFM	CFM	CFM	CFM	CFM	CFM	CFM	CFM	CFM
30	4 BLADES	THD-30E412	1/4	860	0.26	82	5211	4345	3132								
		THD-30E416	1/3	860	0.36	83	6390	5562	4518								
		THD-30E420	1/2	860	0.47	82	7438	6708	5693								
		THD-30E424	3/4	860	0.61	80	8582	7800	6808								
		THD-30E428	3/4	860	0.77	79	9692	8801	7832	6386							
		THD-30E432	1	860	0.94	82	10542	9679	8631	7261							
		THD-30E412	3/4	1160	0.63	89	7029	6420	5725	4857	3769						
		THD-30E416	1	1160	0.88	90	8619	8011	7389	6670	5689						
		THD-30E420	1½	1160	1.15	90	10033	9513	8942	8296	7230	6256					
		THD-30E424	1½	1160	1.51	88	11576	11019	10405	9710	8832	7780					
		THD-30E428	2	1160	1.89	87	13073	12414	11755	11089	10172	9060					
		THD-30E432	3	1160	2.30	89	14219	13603	12928	12174	11317	10307	9104				
		THD-30E412	3	1750	2.21	102	10604	10213	9803	9369	8908	8402	7828	7222	6575		
		THD-30E416	3	1750	3.01	103	13002	12604	12198	11786	11377	10955	10491	9968	9375		
		THD-30E420	5	1750	3.96	101	15136	14800	14451	14086	13705	13313	12898	12429	11809	10320	
		THD-30E424	5	1750	5.19	99	17464	17104	16730	16340	15931	15502	15049	14561	14020	12699	
	8 BLADES	THD-30E812	1/2	860	0.47	82	5223	4727	4061	3260							
		THD-30E816	3/4	860	0.58	83	6297	5801	5202	4415							
		THD-30E820	3/4	860	0.71	85	7359	6944	6316	5255							
		THD-30E824	1	860	0.96	85	8911	8360	7772	7059							
		THD-30E828	1½	860	1.24	83	10214	9752	9193	8421	7397						
		THD-30E832	1½	860	1.46	84	11391	10816	10175	9431							
		THD-30E812	1½	1160	1.15	89	7045	6699	6296	5786	5312	4758	3947				
		THD-30E816	1½	1160	1.42	91	8494	8139	7752	7321	6832	6264	5496				
		THD-30E820	2	1160	1.74	92	9926	9636	9302	8891	8258	7496	6480				
		THD-30E824	3	1160	2.38	93	12019	11619	11200	10764	10318	9808	9115				
		THD-30E828	3	1160	3.03	91	13777	13446	13086	12686	12221	11651	10997	10228			
		THD-30E832	5	1160	3.67	91	15364	14948	14508	14039	13541	12998	12361	11589			
		THD-30E812	5	1750	3.96	101	10629	10407	10173	9924	9658	9358	9019	8671	8351	7728	6863
		THD-30E816	5	1750	4.89	103	12814	12584	12346	12098	11841	11572	11290	10992	10677	9988	9181
36	4 BLADES	THD-36E412	1/2	860	0.40	84	7225	5878	4263								
		THD-36E416	1/2	860	0.53	86	9017	7920	6323								
		THD-36E420	3/4	860	0.73	87	11206	10106	8577								
		THD-36E424	1	860	0.99	87	13017	11867	10536	8424							
		THD-36E428	1½	860	1.30	83	14756	13652	12344	10692							
		THD-36E432	1½	860	1.62	84	16249	15105	13829	12138							
		THD-36E412	1	1160	0.97	92	9746	8715	7728	6531	5253						
		THD-36E416	1½	1160	1.31	94	12162	11375	10524	9466	7955						
		THD-36E420	2	1160	1.81	96	15115	14352	13452	12337	11096	9417					
		THD-36E424	3	1160	2.45	92	17558	16727	15844	14901	13768	12280					
		THD-36E428	3	1160	3.19	91	19904	19112	18254	17310	16255	15083					
		THD-36E432	5	1160	3.96	92	21917	21090	20213	19288	18266	17035	15480				
		THD-36E412	5	1750	3.33	105	14702	13994	13322	12701	12060	11307	10498	9718	8914		
		THD-36E416	5	1750	4.50	106	18348	17839	17311	16761	16197	15607	14948	14124	13143	11068	
		THD-36E420	7½	1750	6.22	109	22803	22316	21800	21250	20654	19985	19249	18479	17686	15862	13378
		THD-36E424	10	1750	8.43	106	26489	25948	25391	24820	24231	23633	23016	22365	21654	19965	17734
		THD-36E428	10	1750	10.97	104	30027	29513	28982	28432	27863	27270	26650	26000	25317	23856	22191
	8 BLADES	THD-36E812	3/4	860	0.70	87	6916	6082	5256	4294							
		THD-36E816	1	860	0.91	87	9056	8287	7459	6415	5217						
		THD-36E820	1½	860	1.18	90	11170	10565	9805	8766							
		THD-36E824	1½	860	1.54	90	13637	12933	12093	11028							
		THD-36E828	2	860	1.99	89	15711	15077	14331	13367	11803						
		THD-36E832	3	860	2.56	87	17752	17087	16312	15321	13937						
		THD-36E812	2	1160	1.71	93	9329	8705	8094	7485	6860	6147	5408	4682			
		THD-36E816	3	1160	2.22	95	12215	11655	11071	10469	9813	9034	8191	7295			
		THD-36E820	3	1160	2.94	98	15067	14636	14161	13625	12972	12197	11348	10290			
		THD-36E824	5	1160	3.87	99	18394	17889	17342	16741	16049	15258	14415	13469			
		THD-36E828	5	1160	4.89	100	21192	20736	20245	19706	19103	18399	17544	16375	14583		
		THD-36E832	7½	1160	6.26	97	23944	23466	22951	22391	21767	21042	20178	19139	17713		
		THD-36E812	7½	1750	5.88	107	14074	13658	13246	12836	12432	12033	11631	11222	10811	9953	8952
		THD-36E816	7½	1750	7.52	109	18428	18060	17687	17306	16919	16525	16129	15723	15302	14363	13286
		THD-36E820	10	1750	9.88	110	22730	22451	22162	21861	21545	21214	20863	20489	20075	19123	18070

NOTES:
1. Performance certified is for installation Type A: Free inlet, free outlet.
2. Performance ratings do not include the effects of appurtenances (accessories).
3. The sound power ratings shown are in decibels, referred to 10^{-12} watts calculated per AMCA Standard 301.
4. Values shown are for inlet LwiA sound power levels for installation Type A: Free inlet, free outlet. Ratings do not include the effects of end correction.
5. Sound power values shown are at the peak cataloged pressure for each RPM.

Performance Data – Direct Drive

THD – Die Cast Aluminum Propeller

SIZE	NO. OF BLADES	CATALOG NUMBER	MOTOR HP	FAN RPM	MAX. BHP	LwiA	STATIC PRESSURE (IN. W.G.)										
							0.000	0.125	0.250	0.375	0.500	0.625	0.750	0.875	1.000	1.250	1.500
							CFM	CFM	CFM	CFM	CFM	CFM	CFM	CFM	CFM	CFM	CFM
42	4 BLADES	THD-42E412	1½	860	1.24	92	13346	12114	10747	9066							
		THD-42E416	2	860	1.70	92	16391	15240	14048	12592							
		THD-42E420	3	860	2.26	92	19396	18366	17220	15846	13817						
		THD-42E424	3	860	2.98	90	22344	21242	20035	18665	16913	14841					
		THD-42E428	5	860	3.76	89	25130	23917	22690	21364	19560						
		THD-42E432	5	860	4.59	91	27400	26208	24913	23479	21830	19870					
		THD-42E412	3	1160	3.07	99	18001	17105	16169	15186	14072	12817	11503				
		THD-42E416	5	1160	4.18	100	22109	21265	20398	19525	18605	17537	16278				
		THD-42E420	7½	1160	5.55	100	26162	25417	24627	23788	22896	21898	20631	19042	17648		
		THD-42E424	7½	1160	7.31	97	30139	29338	28497	27613	26680	25674	24542	23214	21738		
		THD-42E428	10	1160	9.24	97	33897	33005	32095	31187	30271	29300	28187	26809	25255		
		THD-42E432	10	1160	11.27	99	36958	36090	35184	34235	33237	32179	31044	29809	28450	25322	
	8 BLADES	THD-42E812	3	860	2.23	91	13293	12580	11757	10797	9905						
		THD-42E816	3	860	2.78	93	16321	15608	14837	13989	13034	11914	10459				
		THD-42E820	5	860	3.45	95	19344	18758	18084	17245	16037	14669					
		THD-42E824	5	860	4.70	95	23357	22594	21786	20937	20029	18967	17595				
		THD-42E828	7½	860	5.97	93	26819	26161	25442	24639	23690	22554	21236	19560			
		THD-42E832	7½	860	7.27	93	29886	29102	28265	27364	26384	25279	23973				
		THD-42E812	5	1160	5.47	99	17930	17416	16867	16276	15607	14886	14200	13547			
		THD-42E816	7½	1160	6.81	101	22014	21494	20953	20388	19794	19168	18503	17789	17014	15179	
		THD-42E820	7½	1160	8.49	103	26092	25669	25218	24729	24193	23585	22830	21904	20932	18717	
		THD-42E824	10	1160	11.49	103	31505	30946	30370	29776	29162	28533	27888	27212	26485	24733	22238
48	4 BLADES	THD-48E412	2	860	1.66	94	16814	15061	13274	11181							
		THD-48E416	3	860	2.25	95	21029	19628	18114	16088	13423						
		THD-48E420	3	860	3.11	96	26057	24666	22984	21007	18747	15640					
		THD-48E424	5	860	4.22	95	30102	28633	27084	25367	23226	20347					
		THD-48E428	5	860	5.48	92	34055	32637	31094	29389	27511	25260					
		THD-48E432	7½	860	6.81	94	37347	35881	34342	32687	30765	28423	25407				
		THD-48E412	5	1160	4.09	100	22679	21334	20098	18843	17334	15781	14231	12497			
		THD-48E416	7½	1160	5.52	102	28364	27346	26278	25175	23986	22523	20667	18673	16734		
		THD-48E420	7½	1160	7.64	104	35146	34148	33068	31862	30489	29021	27494	25806	23756		
		THD-48E424	10	1160	10.35	105	40603	39529	38418	37278	36099	34839	33428	31816	29965	25048	
	8 BLADES	THD-48E812	3	860	2.94	94	16225	15128	14053	12971	11854	10553	9275				
		THD-48E816	5	860	3.82	95	21213	20219	19184	18112	16910	15501	14004	12409			
		THD-48E820	5	860	5.02	99	26184	25400	24530	23526	22291	20905	19342				
		THD-48E824	7½	860	6.61	100	31813	30894	29894	28776	27484	26063	24562				
		THD-48E828	10	860	8.39	98	36624	35786	34874	33866	32711	31341	29627	26988			
		THD-48E832	10	860	10.78	97	41252	40367	39406	38346	37129	35697	34011	31853			
		THD-48E812	7½	1160	7.22	102	21885	21069	20260	19461	18670	17867	17056	16227	15334	13341	11470
		THD-48E816	10	1160	9.37	103	28613	27883	27136	26371	25595	24803	23974	23075	22080	19925	17622

NOTES:
1. Performance certified is for installation Type A: Free inlet, free outlet.
2. Performance ratings do not include the effects of appurtenances (accessories).
3. The sound power ratings shown are in decibels, referred to 10^{-12} watts calculated per AMCA Standard 301.
4. Values shown are for inlet LwiA sound power levels for installation Type A: Free inlet, free outlet. Ratings do not include the effects of end correction.
5. Sound power values shown are at the peak cataloged pressure for each RPM.

Performance Data – Belt Driven

THBF – Die Cast Aluminum Propeller

SIZE	NO. OF BLADES	PROP	MOTOR HP	FAN RPM	MAX. BHP	LwiA	STATIC PRESSURE (IN. W.G.)										
							0.000	0.125	0.250	0.375	0.500	0.625	0.750	0.875	1.000	1.250	1.500
							CFM	CFM	CFM	CFM	CFM	CFM	CFM	CFM	CFM	CFM	CFM
21	4 BLADES	THBF-21E432	1/4	1009	0.25	75	3923	3278									
		THBF-21E428	1/4	1077	0.25	75	3827	3295									
		THBF-21E420	1/4	1260	0.25	80	3591	3180	2574								
		THBF-21E432	1/3	1106	0.33	77	4300	3735									
		THBF-21E428	1/3	1181	0.33	79	4197	3721	3069								
		THBF-21E420	1/3	1382	0.33	82	3938	3572	3097								
		THBF-21E432	1/2	1271	0.50	81	4941	4490	3896								
		THBF-21E428	1/2	1356	0.50	82	4819	4412	3936								
		THBF-21E420	1/2	1587	0.50	86	4523	4211	3844	3356							
		THBF-21E432	3/4	1454	0.75	84	5653	5282	4763	4244							
		THBF-21E428	3/4	1552	0.75	86	5515	5164	4780	4317							
		THBF-21E420	3/4	1816	0.75	90	5175	4907	4608	4257	3801						
		THBF-21E432	1	1601	1.00	87	6224	5896	5455	4985							
		THBF-21E428	1	1709	1.00	90	6073	5757	5418	5034	4563						
		THBF-21E420	1	1999	1.00	93	5697	5456	5192	4898	4552	4103					
		THBF-21E432	1½	1832	1.50	91	7123	6842	6502	6075	5676	5212					
		THBF-21E428	1½	1956	1.50	93	6951	6677	6388	6082	5736	5338					
		THBF-21E420	1½	2288	1.50	96	6520	6312	6089	5849	5587	5288	4935				
		THBF-21E432	2	2017	2.00	93	7842	7590	7303	6941	6551	6195	5774				
		THBF-21E428	2	2153	2.00	96	7651	7403	7144	6875	6585	6263	5899				
		THBF-21E420	2	2519	2.00	99	7179	6990	6792	6581	6356	6112	5840	5528	5143		
	8 BLADES	THBF-21E832	1/4	879	0.25	73	3802	3255									
		THBF-21E832	1/3	964	0.33	76	4170	3703									
		THBF-21E832	1/2	1107	0.50	79	4788	4411	3843								
		THBF-21E832	3/4	1267	0.75	83	5480	5165	4732								
		THBF-21E832	1	1395	1.00	85	6034	5753	5399	4930							
		THBF-21E832	1½	1596	1.50	89	6903	6663	6385	6031	5609						
		THBF-21E832	2	1757	2.00	91	7600	7384	7143	6856	6504	6115					
24	4 BLADES	THBF-24E432	1/3	948	0.33	76	5392	4582									
		THBF-24E424	1/3	1089	0.33	79	5117	4497	3687								
		THBF-24E416	1/3	1312	0.33	84	4582	4133	3529								
		THBF-24E432	1/2	1088	0.50	81	6189	5532	4731								
		THBF-24E424	1/2	1251	0.50	83	5878	5346	4739	3885							
		THBF-24E416	1/2	1507	0.50	88	5263	4883	4427	3789							
		THBF-24E432	3/4	1246	0.75	84	7087	6546	5824	5101							
		THBF-24E424	3/4	1432	0.75	87	6728	6269	5774	5180	4380						
		THBF-24E416	3/4	1725	0.75	92	6024	5698	5329	4888	4289						
		THBF-24E432	1	1371	1.00	86	7799	7317	6690	6068							
		THBF-24E424	1	1576	1.00	91	7405	6990	6550	6065	5466	4674					
		THBF-24E416	1	1899	1.00	95	6632	6339	6015	5649	5206	4620					
		THBF-24E432	1½	1569	1.50	90	8925	8513	8023	7430	6907						
		THBF-24E424	1½	1804	1.50	94	8476	8116	7739	7346	6909	6395	5775				
		THBF-24E416	1½	2173	1.50	99	7589	7336	7063	6767	6439	6060	5589	4984			
		THBF-24E432	2	1727	2.00	92	9824	9454	9037	8523	7996	7529					
		THBF-24E424	2	1986	2.00	98	9331	9006	8667	8317	7950	7541	7071	6523	5842		
		THBF-24E416	2	2392	2.00	102	8354	8125	7883	7624	7345	7039	6693	6278	5782		
		THBF-24E432	3	1977	3.00	96	11246	10927	10580	10187	9723	9256	8847	8416			
		THBF-24E424	3	2273	3.00	101	10680	10397	10105	9805	9498	9178	8835	8454	8030	7001	
		THBF-24E416	3	2738	3.00	105	9562	9364	9156	8939	8710	8468	8209	7928	7615	6842	
	8 BLADES	THBF-24E832	1/3	813	0.32	76	5162	4534									
		THBF-24E832	1/2	933	0.50	80	5924	5407	4666								
		THBF-24E832	3/4	1068	0.74	83	6781	6345	5784								
		THBF-24E832	1	1176	1.00	86	7466	7078	6608	6002							
		THBF-24E832	1½	1346	1.50	89	8546	8213	7835	7380	6829						
		THBF-24E832	2	1481	2.00	91	9403	9103	8772	8394	7946	7429					
		THBF-24E832	3	1695	3.00	95	10761	10503	10224	9921	9582	9195	8757	8276			

NOTES:
1. Performance certified is for installation Type A: Free inlet, free outlet.
2. Power rating (BHP) does not include transmission losses.
3. Performance ratings do not include the effects of appurtenances (accessories).
4. The sound power ratings shown are in decibels, referred to 10^{-12} watts calculated per AMCA Standard 301.
5. Values shown are for inlet LwiA sound power levels for installation Type A: Free inlet, free outlet. Ratings do not include the effects of end correction.
6. Sound power values shown are at the peak cataloged pressure for each RPM.

Performance Data – Belt Driven

THBF – Die Cast Aluminum Propeller

SIZE	NO. OF BLADES	PROP	MOTOR HP	FAN RPM	MAX. BHP	LwiA	STATIC PRESSURE (IN. W.G.)										
							0.000	0.125	0.250	0.375	0.500	0.625	0.750	0.875	1.000	1.250	1.500
							CFM	CFM	CFM	CFM	CFM	CFM	CFM	CFM	CFM	CFM	CFM
30	4 BLADES	THBF-30E432	1/2	699	0.50	76	8270	7129	5612								
		THBF-30E424	1/2	809	0.50	80	7810	6992	5828								
		THBF-30E416	1/2	963	0.50	85	6991	6244	5394	4135							
		THBF-30E432	3/4	800	0.75	80	9465	8508	7354								
		THBF-30E424	3/4	926	0.75	84	8939	8260	7313	6235							
		THBF-30E416	3/4	1102	0.75	89	8000	7346	6687	5785	4642						
		THBF-30E432	1	881	1.00	82	10424	9573	8546	7378							
		THBF-30E424	1	1019	1.00	86	9837	9233	8444	7509	6444						
		THBF-30E416	1	1213	1.00	92	8806	8213	7622	6941	6016	4921					
		THBF-30E432	1½	1008	1.50	86	11926	11198	10353	9428	8339						
		THBF-30E424	1½	1166	1.50	90	11256	10740	10132	9348	8532	7616					
		THBF-30E416	1½	1389	1.50	96	10083	9568	9047	8527	7900	7098	6197	5116			
		THBF-30E432	2	1110	2.00	89	13133	12479	11745	10915	10075	8976					
		THBF-30E424	2	1284	2.00	93	12395	11933	11410	10768	10027	9280	8443				
		THBF-30E416	2	1529	2.00	99	11100	10632	10157	9691	9200	8593	7858	7053	6146		
		THBF-30E432	3	1270	3.00	93	15026	14461	13850	13170	12435	11705	10880				
		THBF-30E424	3	1469	3.00	97	14181	13782	13347	12859	12273	11622	10980	10299	9545		
		THBF-30E416	3	1750	3.00	102	12704	12296	11883	11469	11063	10639	10150	9555	8901	7442	
		THBF-30E432	5	1506	5.01	97	17818	17347	16850	16322	15748	15136	14512	13899	13239		
		THBF-30E424	5	1742	5.00	101	16817	16484	16131	15754	15345	14878	14350	13799	13260	12117	10789
		THBF-30E416	5	2074	5.00	107	15056	14712	14366	14017	13666	13323	12978	12617	12219	11233	10105
	8 BLADES	THBF-30E832	1/2	603	0.48	77	7692	6804									
		THBF-30E832	3/4	690	0.74	81	8802	8050	7094								
		THBF-30E832	1	760	1.00	82	9695	9024	8227	7131							
		THBF-30E832	1½	869	1.48	87	11086	10509	9859	9087							
		THBF-30E832	2	957	1.99	90	12208	11690	11119	10479	9715						
		THBF-30E832	3	1095	3.00	93	13969	13521	13040	12519	11946	11284	10510				
		THBF-30E832	5	1299	5.00	97	16571	16197	15805	15391	14952	14485	13978	13408	12788		
36	4 BLADES	THBF-36E432	3/4	667	0.74	80	12170	10674	8366								
		THBF-36E428	3/4	717	0.75	81	11961	10555	8742								
		THBF-36E420	3/4	865	0.75	87	10976	9775	8288	6518							
		THBF-36E432	1	734	1.00	82	13393	12045	10355								
		THBF-36E428	1	789	1.00	83	13162	11907	10416								
		THBF-36E420	1	952	1.00	89	12080	11012	9726	8264							
		THBF-36E432	1½	840	1.49	86	15327	14154	12881	11025							
		THBF-36E428	1½	903	1.50	86	15064	13988	12765	11337							
		THBF-36E420	1½	1089	1.50	93	13819	12905	11845	10651	9355	7664					
		THBF-36E432	2	924	2.00	90	16860	15797	14692	13319	11084						
		THBF-36E428	2	994	2.00	88	16582	15614	14545	13343							
		THBF-36E420	2	1199	2.00	96	15215	14394	13472	12437	11304	10116	8570				
		THBF-36E432	3	1058	3.00	93	19305	18382	17436	16421	15155	13350					
		THBF-36E428	3	1138	3.00	93	18984	18148	17250	16271	15202	13938					
		THBF-36E420	3	1373	3.00	101	17423	16714	15947	15095	14179	13195	12166	11089	9561		
		THBF-36E432	5	1254	5.00	98	22881	22107	21312	20511	19660	18670	17478	15873			
		THBF-36E428	5	1349	5.01	98	22504	21806	21072	20298	19473	18587	17662	16558			
		THBF-36E420	5	1627	5.00	105	20646	20054	19430	18766	18047	17286	16493	15654	14786	12969	
		THBF-36E432	7½	1435	7.50	100	26184	25510	24820	24124	23421	22683	21863	20925	19832		
		THBF-36E428	7½	1544	7.51	101	25757	25150	24521	23866	23183	22466	21708	20917	20096		
		THBF-36E420	7½	1863	7.50	108	23640	23127	22593	22035	21447	20822	20167	19491	18790	17304	15775
	8 BLADES	THBF-36E832	3/4	578	0.72	80	11435	10257	7924								
		THBF-36E832	1	636	1.00	81	12582	11545	10011								
		THBF-36E832	1½	728	1.48	87	14402	13526	12425	10518							
		THBF-36E832	2	801	2.00	87	15846	15063	14133	12901							
		THBF-36E832	3	917	3.01	93	18141	17469	16711	15824	14673	12664					
		THBF-36E832	5	1087	5.00	97	21504	20947	20342	19678	18933	18058	16889	15068			
		THBF-36E832	7½	1244	7.49	99	24610	24127	23615	23067	22476	21831	21110	20265	19143		

NOTES:
1. Performance certified is for installation Type A: Free inlet, free outlet.
2. Power rating (BHP) does not include transmission losses.
3. Performance ratings do not include the effects of appurtenances (accessories).
4. The sound power ratings shown are in decibels, referred to 10^{-12} watts calculated per AMCA Standard 301.
5. Values shown are for inlet LwiA sound power levels for installation Type A: Free inlet, free outlet. Ratings do not include the effects of end correction.
6. Sound power values shown are at the peak cataloged pressure for each RPM.

Performance Data – Belt Driven

THBF – Die Cast Aluminum Propeller

SIZE	NO. OF BLADES	PROP	MOTOR HP	FAN RPM	MAX. BHP	LwiA	STATIC PRESSURE (IN. W.G.)										
							0.000	0.125	0.250	0.375	0.500	0.625	0.750	0.875	1.000	1.250	1.500
							CFM	CFM	CFM	CFM	CFM	CFM	CFM	CFM	CFM	CFM	CFM
42	4 BLADES	THBF-42E432	1	518	1.00	76	15699	13546									
		THBF-42E420	1	654	1.00	79	14293	12741	10846								
		THBF-42E428	1	554	0.99	84	15349	13513	10868								
		THBF-42E432	1½	593	1.50	81	17972	16144	14003								
		THBF-42E428	1½	634	1.50	82	17566	15979	14086								
		THBF-42E420	1½	749	1.50	88	16369	15063	13479	11682							
		THBF-42E432	2	653	2.00	84	19791	18158	16292	13809							
		THBF-42E428	2	698	2.00	85	19339	17900	16329	14177							
		THBF-42E420	2	824	2.00	91	18008	16843	15452	13948	12088						
		THBF-42E432	3	748	3.01	87	22670	21271	19702	18005							
		THBF-42E428	3	799	3.00	89	22137	20879	19598	18064	16068						
		THBF-42E420	3	943	3.00	95	20609	19609	18469	17191	15864	14280					
		THBF-42E432	5	886	5.00	92	26852	25691	24428	23065	21643	19944					
		THBF-42E428	5	947	5.00	93	26238	25176	24116	23007	21718	20173	18235				
		THBF-42E420	5	1118	5.00	99	24434	23603	22704	21699	20618	19520	18350	16973			
		THBF-42E432	7½	1014	7.50	96	30732	29726	28657	27515	26311	25076	23722	21959			
		THBF-42E428	7½	1084	7.51	98	30034	29108	28180	27249	26265	25152	23876	22404	20596		
		THBF-42E420	7½	1280	7.51	103	27974	27255	26494	25674	24781	23838	22884	21908	20861	18264	
		THBF-42E432	10	1116	10.00	98	33823	32914	31959	30950	29889	28785	27663	26461	25012		
		THBF-42E428	10	1193	10.01	100	33054	32214	31368	30528	29670	28759	27741	26604	25326		
		THBF-42E420	10	1408	10.00	106	30772	30121	29439	28721	27949	27124	26265	25398	24522	22617	20228
	8 BLADES	THBF-42E832	1	448	0.98	76	14809	13094									
		THBF-42E832	1½	513	1.51	81	16958	15515	13602								
		THBF-42E832	2	564	1.98	84	18644	17355	15773								
		THBF-42E832	3	646	3.00	88	21355	20252	18990	17437							
		THBF-42E832	5	765	4.99	92	25288	24374	23374	22259	20948	19305					
		THBF-42E832	7½	876	7.51	96	28958	28167	27322	26414	25419	24288	22993				
		THBF-42E832	10	964	9.99	98	31866	31152	30399	29600	28748	27822	26788	25638	24225		
48	4 BLADES	THBF-48E432	1½	520	1.48	82	22080	19588	15933								
		THBF-48E428	1½	559	1.50	82	21746	19380	16448								
		THBF-48E420	1½	675	1.49	89	20046	18013	15561	12766							
		THBF-48E432	2	572	2.00	83	24289	22046	19250								
		THBF-48E428	2	616	2.01	84	23963	21852	19383								
		THBF-48E420	2	743	2.01	91	22065	20255	18121	15709	12767						
		THBF-48E432	3	655	2.99	87	27813	25865	23736	20774							
		THBF-48E428	3	705	3.01	88	27425	25613	23574	21254							
		THBF-48E420	3	850	3.00	95	25243	23692	21920	19954	17812	15405					
		THBF-48E432	5	777	5.01	94	32993	31355	29680	27766	25309	21382					
		THBF-48E428	5	835	5.00	93	32482	30975	29347	27557	25622						
		THBF-48E420	5	1008	5.01	100	29935	28648	27244	25695	24042	22264	20432	18349			
		THBF-48E432	7½	889	7.51	96	37749	36322	34875	33366	31631	29530	26714				
		THBF-48E428	7½	956	7.51	97	37190	35885	34503	33030	31439	29767	27778				
		THBF-48E420	7½	1153	7.50	104	34241	33127	31942	30660	29286	27850	26324	24735	23125	18742	
		THBF-48E432	10	978	10.01	99	41528	40235	38921	37589	36162	34520	32595	30183			
		THBF-48E428	10	1052	10.00	99	40924	39744	38508	37208	35831	34362	32843	31120			
		THBF-48E420	10	1269	9.99	107	37686	36678	35621	34498	33297	32035	30728	29351	27920	24979	20940
	8 BLADES	THBF-48E832	1½	451	1.47	82	20886	18877	15242								
		THBF-48E832	2	496	2.00	83	22970	21195	18676								
		THBF-48E832	3	568	2.98	88	26305	24801	22947	19987							
		THBF-48E832	5	673	4.99	92	31167	29931	28520	26833	24415						
		THBF-48E832	7½	771	7.52	97	35706	34642	33472	32163	30635	28632	25494				
		THBF-48E832	10	848	10.01	100	39272	38312	37276	36146	34892	33443	31600	28884			

NOTES:
1. Performance certified is for installation Type A: Free inlet, free outlet.
2. Power rating (BHP) does not include transmission losses.
3. Performance ratings do not include the effects of appurtenances (accessories).
4. The sound power ratings shown are in decibels, referred to 10^{-12} watts calculated per AMCA Standard 301.
5. Values shown are for inlet LwiA sound power levels for installation Type A: Free inlet, free outlet. Ratings do not include the effects of end correction.
6. Sound power values shown are at the peak cataloged pressure for each RPM.

Performance Data – Belt Driven

THBF – Cast Aluminum Propeller

SIZE	NO. OF BLADES	PROP	MOTOR HP	FAN RPM	MAX. BHP	LwiA	STATIC PRESSURE (IN. W.G.)										
							0.000	0.125	0.250	0.375	0.500	0.625	0.750	0.875	1.000	1.250	1.500
							CFM	CFM	CFM	CFM	CFM	CFM	CFM	CFM	CFM	CFM	CFM
54	6 BLADES	THBF-54C625	1½	395	1.51	73	25883	21883									
		THBF-54C620	1½	441	1.50	78	25365	21498	16063								
		THBF-54C610	1½	543	1.47	84	23216	20484	17341	12860							
		THBF-54C625	2	434	2.00	79	28438	24961	19832								
		THBF-54C620	2	485	2.00	79	27896	24445	20354								
		THBF-54C610	2	598	2.00	86	25568	23224	20250	17048							
		THBF-54C625	3	497	3.00	81	32566	29606	25509								
		THBF-54C620	3	555	3.00	84	31922	29005	25685	21138							
		THBF-54C610	3	684	3.00	90	29245	27302	24647	22271	19221						
		THBF-54C625	5	589	5.00	86	38595	36119	33391	29423							
		THBF-54C620	5	658	5.01	88	37846	35475	32713	29909	26150						
		THBF-54C610	5	811	5.01	96	34675	33089	31135	28814	26838	24618	21603				
		THBF-54C625	7½	675	7.53	92	44230	42071	39849	37138	33506	30286					
		THBF-54C620	7½	753	7.51	93	43310	41281	38966	36503	34044	30922	26841				
		THBF-54C610	7½	928	7.49	100	39677	38316	36777	34842	32839	31114	29335	27052	24325		
		THBF-54C625	10	742	10.00	94	48620	46656	44672	42492	39642	36319	33429				
		THBF-54C620	10	829	10.03	96	47682	45857	43826	41607	39389	37118	34257	30419			
		THBF-54C610	10	1022	9.97	102	43696	42472	41128	39551	37683	35923	34365	32782	30896	26025	
		THBF-54C625	15	850	15.04	98	55697	53984	52266	50497	48544	46117	43181	40511	37927		
		THBF-54C620	15	949	15.04	98	54584	53005	51307	49449	47495	45554	43619	41506	38785		
		THBF-54C610	15	1170	15.03	105	50024	48965	47833	46606	45173	43542	41932	40505	39158	36234	32229
60	6 BLADES	THBF-60C625	2	393	2.01	79	32113	26999									
		THBF-60C620	2	428	2.00	80	31669	27579									
		THBF-60C610	2	538	2.00	86	29899	26398	22260	16963							
		THBF-60C625	3	449	3.00	83	36689	32285	27039								
		THBF-60C620	3	490	3.00	86	36257	32737	28516								
		THBF-60C610	3	616	3.01	90	34233	31226	27852	23955	19000						
		THBF-60C625	5	533	5.01	88	43553	39927	35975	30979							
		THBF-60C620	5	581	5.01	91	42991	40019	36900	32968							
		THBF-60C610	5	730	5.01	95	40569	38067	35376	32414	29128	25447	20241				
		THBF-60C625	7½	610	7.53	93	49845	46723	43323	39787	35029						
		THBF-60C620	7½	665	7.53	95	49206	46597	44007	41051	37442						
		THBF-60C610	7½	835	7.49	99	46404	44235	41947	39510	36871	34013	30936	27336			
		THBF-60C625	10	671	10.01	96	54829	52015	48982	45829	42411						
		THBF-60C620	10	731	10.00	98	54090	51707	49375	46882	44002	40489					
		THBF-60C610	10	919	10.00	101	51072	49110	47061	44911	42633	40191	37586	34826	31787		
		THBF-60C625	15	768	15.02	99	62755	60320	57734	55017	52261	49334	45641				
		THBF-60C620	15	837	15.02	102	61933	59845	57805	55747	53521	51031	48212	44570			
		THBF-60C610	15	1052	14.98	105	58463	56758	54997	53173	51278	49297	47209	45007	42703	37726	31158
		THBF-60C625	20	845	20.00	101	69047	66845	64530	62109	59606	57102	54432	51188			
		THBF-60C620	20	921	20.01	104	68149	66250	64384	62536	60628	58550	56280	53776	50801		
		THBF-60C610	20	1158	20.00	108	64354	62810	61223	59592	57911	56175	54372	52489	50520	46348	41810
		THBF-60C625	25	911	25.07	103	74440	72405	70280	68066	65776	63449	61115	58614	55634		
		THBF-60C620	25	993	25.07	106	73476	71716	69974	68263	66531	64719	62744	60625	58317	52314	
		THBF-60C610	25	1248	25.04	110	69356	67925	66462	64963	63426	61848	60224	58545	56801	53109	49174

NOTES:
1. Performance certified is for installation Type A: Free inlet, free outlet.
2. Power rating (BHP) does not include transmission losses.
3. Performance ratings do not include the effects of appurtenances (accessories).
4. The sound power ratings shown are in decibels, referred to 10^{-12} watts calculated per AMCA Standard 301.
5. Values shown are for inlet LwiA sound power levels for installation Type A: Free inlet, free outlet. Ratings do not include the effects of end correction.
6. Sound power values shown are at the peak cataloged pressure for each RPM.

Performance Data – Belt Driven

THBF – Fabricated Steel Propeller

SIZE	PROP	MOTOR HP	FAN RPM	MAX. BHP	LwiA	STATIC PRESSURE (IN. W.G.)										
						0.000	0.125	0.250	0.375	0.500	0.625	0.750	0.875	1.000	1.250	1.500
						CFM	CFM	CFM	CFM	CFM	CFM	CFM	CFM	CFM	CFM	CFM
24	THBF-24Z545	1/3	749	0.33	75	5485	4687									
	THBF-24Z535	1/3	873	0.33	78	5113	4635	3868								
	THBF-24Z545	1/2	861	0.50	79	6305	5620									
	THBF-24Z535	1/2	1003	0.49	81	5874	5479	4897								
	THBF-24Z545	3/4	985	0.75	83	7213	6595									
	THBF-24Z535	3/4	1148	0.74	85	6724	6389	5963	5373							
	THBF-24Z545	1	1084	1.00	85	7938	7362	6846								
	THBF-24Z535	1	1264	1.00	87	7403	7104	6750	6269	5715						
	THBF-24Z545	2	1366	2.00	91	10002	9526	9117	8712							
	THBF-24Z535	2	1592	2.00	93	9324	9093	8840	8555	8211	7789	7351	6862			
	THBF-24Z545	3	1563	3.00	94	11445	11025	10642	10304	9939						
	THBF-24Z535	3	1822	2.98	96	10671	10471	10258	10026	9772	9476	9125	8739	8359		
30	THBF-30Z545	1/2	664	0.50	79	8572	7038									
	THBF-30Z535	1/2	791	0.50	80	8044	7207	6077								
	THBF-30Z545	3/4	761	0.75	82	9824	8606									
	THBF-30Z535	3/4	906	0.75	84	9213	8510	7602	6450							
	THBF-30Z545	1	837	1.00	85	10805	9750									
	THBF-30Z535	1	997	0.99	87	10139	9511	8743	7834							
	THBF-30Z545	1½	957	1.49	88	12354	11473	10256								
	THBF-30Z535	1½	1141	1.49	90	11603	11065	10451	9711	8906						
	THBF-30Z545	2	1055	2.00	91	13619	12838	11842	10501							
	THBF-30Z535	2	1256	1.99	93	12772	12289	11753	11133	10425	9683					
	THBF-30Z545	3	1207	3.00	94	15581	14914	14130	13141	11905						
	THBF-30Z535	3	1437	3.00	96	14613	14195	13745	13253	12695	12078	11442	10740			
	THBF-30Z545	5	1431	5.01	99	18473	17921	17311	16611	15780	14813					
	THBF-30Z535	5	1704	5.00	101	17328	16979	16612	16224	15810	15358	14863	14338	13804	12627	
36	THBF-36Z545	3/4	561	0.74	79	12289	10082									
	THBF-36Z535	3/4	668	0.75	81	11610	10416	8839								
	THBF-36Z545	1	618	1.00	82	13537	11654									
	THBF-36Z535	1	736	0.99	84	12792	11741	10380								
	THBF-36Z545	1½	707	1.50	85	15487	13952									
	THBF-36Z535	1½	842	1.49	87	14634	13740	12649	11385							
	THBF-36Z545	2	778	1.99	88	17042	15698	13818								
	THBF-36Z535	2	927	2.00	90	16112	15311	14379	13272	12067						
	THBF-36Z545	3	891	3.01	92	19518	18387	16935	15021							
	THBF-36Z535	3	1061	2.99	93	18441	17752	16989	16107	15120	14090					
	THBF-36Z545	5	1056	5.00	96	23132	22205	21122	19797	18222						
	THBF-36Z535	5	1257	5.00	98	21847	21273	20660	19994	19249	18433	17588	16709	15603		
	THBF-36Z545	7½	1209	7.50	100	26483	25686	24800	23776	22579	21230					
	THBF-36Z535	7½	1439	7.50	102	25010	24513	23990	23438	22846	22200	21504	20772	20034	18392	
42	THBF-42Z545	1	448	1.00	77	16330	13652									
	THBF-42Z530	1	593	0.99	84	14755	13435	11683								
	THBF-42Z545	1½	513	1.51	80	18699	16543									
	THBF-42Z530	1½	679	1.50	88	16895	15793	14321	12786							
	THBF-42Z545	2	564	2.00	83	20558	18667									
	THBF-42Z530	2	748	2.01	91	18612	17630	16394	14982	13448						
	THBF-42Z545	3	646	3.00	87	23547	21951	19883								
	THBF-42Z530	3	856	3.01	94	21299	20458	19486	18281	17062	15789					
	THBF-42Z545	5	765	5.00	90	27884	26573	25056	23130							
	THBF-42Z530	5	1014	5.00	98	25230	24533	23771	22902	21880	20822	19825	18724			
	THBF-42Z545	7½	876	7.51	94	31930	30802	29556	28116	26357						
	THBF-42Z530	7½	1161	7.50	103	28888	28285	27641	26949	26166	25279	24345	23451	22581	20341	
	THBF-42Z545	10	964	10.00	96	35138	34120	33021	31805	30390	28717					
	THBF-42Z530	10	1278	10.01	105	31799	31254	30680	30072	29418	28685	27876	27027	26197	24606	22555

NOTES:
1. Performance certified is for installation Type A: Free inlet, free outlet.
2. Power rating (BHP) does not include transmission losses.
3. Performance ratings do not include the effects of appurtenances (accessories).
4. The sound power ratings shown are in decibels, referred to 10^{-12} watts calculated per AMCA Standard 301.
5. Values shown are for inlet LwiA sound power levels for installation Type A: Free inlet, free outlet. Ratings do not include the effects of end correction.
6. Sound power values shown are at the peak cataloged pressure for each RPM.

Performance Data – Belt Driven

THBF – Fabricated Steel Propeller

SIZE	PROP	MOTOR HP	FAN RPM	MAX. BHP	LwiA	STATIC PRESSURE (IN. W.G.)										
						0.000	0.125	0.250	0.375	0.500	0.625	0.750	0.875	1.000	1.250	1.500
						CFM	CFM	CFM	CFM	CFM	CFM	CFM	CFM	CFM	CFM	CFM
48	THBF-48Z545	1½	438	1.49	80	22253	18490									
	THBF-48Z535	1½	521	1.49	83	21187	19153	16550								
	THBF-48Z545	2	482	2.00	83	24489	21234									
	THBF-48Z535	2	574	1.97	86	23342	21548	19279								
	THBF-48Z545	3	552	3.01	87	28045	25373									
	THBF-48Z535	3	657	2.98	89	26718	25192	23352	21267							
	THBF-48Z545	5	654	4.99	91	33227	31093	28327								
	THBF-48Z535	5	779	5.01	94	31679	30419	29004	27365	25607	23649					
	THBF-48Z545	7½	749	7.52	95	38054	36246	34048	31405							
	THBF-48Z535	7½	891	7.50	97	36234	35145	33967	32650	31186	29648	28049	25999			
	THBF-48Z545	10	824	10.00	98	41864	40247	38356	36114	33529						
	THBF-48Z535	10	981	10.01	100	39894	38911	37865	36732	35480	34126	32728	31298	29648		
54	THBF-54Z545	1½	331	1.49	76	26051	21297									
	THBF-54Z530	1½	435	1.50	84	23546	21126	18182								
	THBF-54Z545	2	364	2.01	79	28648	24812									
	THBF-54Z530	2	478	1.98	86	25873	23700	21180	17393							
	THBF-54Z545	3	417	3.02	83	32819	29675									
	THBF-54Z530	3	548	2.99	90	29662	27794	25735	23365							
	THBF-54Z545	5	494	4.99	87	38880	36271	32992								
	THBF-54Z530	5	649	5.01	94	35129	33573	31911	30114	28114	25696					
	THBF-54Z545	7½	565	7.51	91	44468	42187	39772								
	THBF-54Z530	7½	743	7.49	98	40217	38869	37450	35958	34362	32624	30716	28041			
	THBF-54Z545	10	622	10.00	93	48954	46878	44775	42137							
	THBF-54Z530	10	818	10.02	100	44277	43057	41786	40462	39075	37600	36015	34322	32246		
	THBF-54Z545	15	712	15.02	97	56037	54219	52418	50493	48031						
	THBF-54Z530	15	936	15.01	103	50664	49603	48509	47379	46213	45006	43744	42407	41006	37855	
60	THBF-60Z545	2	322	1.98	79	32930	26962									
	THBF-60Z530	2	427	1.99	85	30001	27166	23436								
	THBF-60Z545	3	369	3.02	83	37737	32936									
	THBF-60Z530	3	489	3.01	89	34357	31988	28895	25462							
	THBF-60Z545	5	437	5.01	87	44691	40906									
	THBF-60Z530	5	580	5.01	94	40750	38813	36505	33754	30911	26917					
	THBF-60Z545	7½	500	7.50	91	51134	47940	43879								
	THBF-60Z530	7½	664	7.52	98	46652	44987	43125	40909	38479	36027	33050				
	THBF-60Z545	10	550	10.01	93	56248	53397	49966	45643							
	THBF-60Z530	10	730	10.01	100	51289	49788	48152	46289	44154	41942	39710	37118	33532		
	THBF-60Z545	15	630	15.03	97	64429	61989	59209	55927	51992						
	THBF-60Z530	15	836	14.99	104	58736	57438	56056	54567	52895	51040	49100	47185	45208	40139	
	THBF-60Z545	20	693	20.02	100	70872	68676	66242	63483	60285						
	THBF-60Z545	25	747	25.07	101	76395	74371	72166	69724	66966	63854					

NOTES:
1. Performance certified is for installation Type A: Free inlet, free outlet.
2. Power rating (BHP) does not include transmission losses.
3. Performance ratings do not include the effects of appurtenances (accessories).
4. The sound power ratings shown are in decibels, referred to 10^{-12} watts calculated per AMCA Standard 301.
5. Values shown are for inlet LwiA sound power levels for installation Type A: Free inlet, free outlet. Ratings do not include the effects of end correction.
6. Sound power values shown are at the peak cataloged pressure for each RPM.

Performance Data – Direct Drive

THDF – Die Cast Aluminum Propeller

SIZE	NO. OF BLADES	PROP	MOTOR HP	FAN RPM	MAX. BHP	LwiA	STATIC PRESSURE (IN. W.G.)										
							0.000	0.125	0.250	0.375	0.500	0.625	0.750	0.875	1.000	1.250	1.500
							CFM	CFM	CFM	CFM	CFM	CFM	CFM	CFM	CFM	CFM	CFM
21	4 BLADES	THDF-21E412	1/4	1160	0.11	78	2370	1818									
		THDF-21E416	1/4	1160	0.14	78	2876	2406									
		THDF-21E420	1/4	1160	0.18	76	3349	2855									
		THDF-21E424	1/4	1160	0.24	77	3828	3331	2587								
		THDF-21E428	1/3	1160	0.30	78	4209	3735	3059								
		THDF-21E432	1/2	1160	0.37	79	4622	4096	3387								
		THDF-21E412	1/2	1750	0.37	89	3575	3249	2864	2414							
		THDF-21E416	1/2	1750	0.50	90	4340	4061	3733	3310	2716						
		THDF-21E420	3/4	1750	0.63	90	5053	4730	4405	4007	3468						
		THDF-21E424	1	1750	0.83	87	5775	5471	5128	4739	4290						
		THDF-21E428	1	1750	1.04	89	6350	6037	5724	5380	4925	4322					
		THDF-21E432	1½	1750	1.29	91	6973	6649	6288	5879	5415	4864					
	8 BLADES	THDF-21E812	1/4	1160	0.17	79	2297	1930	1504								
		THDF-21E816	1/4	1160	0.22	81	2893	2556	2115								
		THDF-21E820	1/3	1160	0.28	81	3449	3123	2659								
		THDF-21E824	1/3	1160	0.36	81	4011	3706	3294								
		THDF-21E828	1/2	1160	0.46	80	4553	4226	3818								
		THDF-21E832	3/4	1160	0.57	79	5085	4743	4314								
		THDF-21E812	3/4	1750	0.57	90	3466	3242	2987	2719	2447	2114					
		THDF-21E816	3/4	1750	0.74	92	4365	4154	3924	3669	3378						
		THDF-21E820	1	1750	0.96	93	5204	5004	4780	4518	4208	3828					
		THDF-21E824	1½	1750	1.24	93	6051	5862	5653	5419	5147	4804					
		THDF-21E828	1½	1750	1.60	91	6869	6663	6440	6200	5933	5588	4987				
24	4 BLADES	THDF-24E412	1/4	860	0.05	73	2386	1342									
		THDF-24E416	1/4	860	0.08	75	2969	2024									
		THDF-24E420	1/4	860	0.10	74	3505	2571									
		THDF-24E424	1/4	860	0.14	72	4082	3181									
		THDF-24E428	1/4	860	0.19	72	4520	3696									
		THDF-24E432	1/4	860	0.24	73	4992	4083									
		THDF-24E412	1/4	1160	0.13	81	3219	2510									
		THDF-24E416	1/4	1160	0.19	82	4005	3416	2531								
		THDF-24E420	1/4	1160	0.25	83	4727	4111	3278								
		THDF-24E424	1/3	1160	0.35	80	5505	4859	4145								
		THDF-24E428	1/2	1160	0.46	80	6097	5496	4844								
		THDF-24E432	3/4	1160	0.58	81	6734	6091	5354								
		THDF-24E412	1/2	1750	0.45	94	4856	4434	3924	3412	2826						
		THDF-24E416	3/4	1750	0.65	94	6042	5676	5273	4806	4216						
		THDF-24E420	1	1750	0.88	94	7131	6687	6304	5905	5326	4589					
		THDF-24E424	1½	1750	1.21	90	8306	7870	7446	7020	6545	5974					
		THDF-24E428	1½	1750	1.57	92	9199	8790	8395	8016	7589	7051	6369				
		THDF-24E432	2	1750	1.99	95	10159	9738	9308	8871	8383	7804	7122				
	8 BLADES	THDF-24E812	1/4	860	0.09	76	2311	1746									
		THDF-24E816	1/4	860	0.12	77	2965	2423									
		THDF-24E820	1/4	860	0.16	77	3630	3073									
		THDF-24E824	1/4	860	0.22	76	4270	3766									
		THDF-24E828	1/3	860	0.28	75	4902	4358									
		THDF-24E832	1/2	860	0.37	75	5498	4969	4068								
		THDF-24E812	1/4	1160	0.23	84	3117	2713	2275								
		THDF-24E816	1/3	1160	0.31	84	3999	3633	3179	2510							
		THDF-24E820	1/2	1160	0.42	86	4896	4514	4054	3427							
		THDF-24E824	3/4	1160	0.56	86	5760	5401	5005	4443							
		THDF-24E828	3/4	1160	0.73	85	6612	6228	5797	5219							
		THDF-24E832	1	1160	0.92	83	7416	7047	6621	6081							
		THDF-24E812	3/4	1750	0.79	95	4703	4448	4174	3878	3592	3281					
		THDF-24E816	1	1750	1.09	96	6033	5803	5554	5280	4975	4643	4255				
		THDF-24E820	1½	1750	1.44	97	7387	7144	6884	6605	6300	5958	5558	5082			
		THDF-24E824	2	1750	1.92	97	8689	8459	8217	7962	7700	7422	7093	6599			
		THDF-24E828	3	1750	2.50	95	9975	9729	9470	9196	8910	8607	8257	7775			
		THDF-24E832	3	1750	3.16	94	11187	10952	10703	10438	10154	9848	9507	9095	8505		

NOTES:
1. Performance certified is for installation Type A: Free inlet, free outlet.
2. Performance ratings do not include the effects of appurtenances (accessories).
3. The sound power ratings shown are in decibels, referred to 10^{-12} watts calculated per AMCA Standard 301.
4. Values shown are for inlet LwiA sound power levels for installation Type A: Free inlet, free outlet. Ratings do not include the effects of end correction.
5. Sound power values shown are at the peak cataloged pressure for each RPM.

Performance Data – Direct Drive

THDF – Die Cast Aluminum Propeller

SIZE	NO. OF BLADES	CATALOG NUMBER	MOTOR HP	FAN RPM	MAX. BHP	LwiA	STATIC PRESSURE (IN. W.G.)										
							0.000	0.125	0.250	0.375	0.500	0.625	0.750	0.875	1.000	1.250	1.500
							CFM	CFM	CFM	CFM	CFM	CFM	CFM	CFM	CFM	CFM	CFM
30	4 BLADES	THDF-30E412	1/4	860	0.26	82	5206	4340	3129								
		THDF-30E416	1/3	860	0.36	83	6382	5557	4511								
		THDF-30E420	1/2	860	0.47	81	7430	6700	5682								
		THDF-30E424	3/4	860	0.61	80	8571	7788	6796								
		THDF-30E428	3/4	860	0.77	79	9674	8786	7814	6374							
		THDF-30E432	1	860	0.94	82	10522	9659	8611	7243							
		THDF-30E412	3/4	1160	0.64	89	7023	6414	5719	4853	3764						
		THDF-30E416	1	1160	0.88	90	8608	8001	7381	6663	5680						
		THDF-30E420	1½	1160	1.15	90	10022	9502	8931	8284	7219	6246					
		THDF-30E424	1½	1160	1.51	88	11560	11004	10390	9695	8815	7766					
		THDF-30E428	2	1160	1.89	87	13049	12391	11735	11070	10146	9042					
		THDF-30E432	3	1160	2.30	89	14193	13576	12901	12147	11291	10282	9077				
		THDF-30E412	3	1750	2.21	102	10594	10204	9794	9360	8900	8393	7820	7215	6569		
		THDF-30E416	3	1750	3.01	103	12986	12588	12183	11773	11365	10944	10481	9957	9363		
		THDF-30E420	5	1750	3.96	101	15119	14783	14434	14069	13688	13296	12881	12411	11786	10308	
		THDF-30E424	5	1750	5.19	99	17440	17081	16707	16316	15908	15480	15027	14539	13997	12673	
	8 BLADES	THDF-30E812	1/2	860	0.47	82	5221	4724	4059	3257							
		THDF-30E816	3/4	860	0.58	82	6293	5797	5198	4410							
		THDF-30E820	3/4	860	0.71	85	7354	6939	6309	5247							
		THDF-30E824	1	860	0.96	85	8902	8352	7764	7048							
		THDF-30E828	1½	860	1.24	83	10204	9741	9181	8408	7382						
		THDF-30E832	1½	860	1.46	84	11375	10800	10160	9414							
		THDF-30E812	1½	1160	1.15	89	7042	6695	6292	5783	5309	4755	3945				
		THDF-30E816	1½	1160	1.42	91	8489	8134	7747	7316	6827	6258	5490				
		THDF-30E820	2	1160	1.74	92	9919	9630	9296	8884	8248	7486	6468				
		THDF-30E824	3	1160	2.38	93	12007	11607	11189	10754	10307	9795	9099				
		THDF-30E828	3	1160	3.03	91	13764	13433	13071	12670	12204	11633	10979	10209			
		THDF-30E832	5	1160	3.67	91	15343	14927	14486	14017	13520	12976	12338	11561			
		THDF-30E812	5	1750	3.96	101	10624	10402	10168	9919	9652	9352	9013	8665	8346	7724	6857
		THDF-30E816	5	1750	4.89	103	12806	12576	12338	12091	11834	11565	11282	10984	10669	9979	9172
36	4 BLADES	THDF-36E412	1/2	860	0.40	84	7161	5836	4236								
		THDF-36E416	1/2	860	0.53	86	8946	7857	6253								
		THDF-36E420	3/4	860	0.74	87	11103	9992	8473								
		THDF-36E424	1	860	0.99	87	12861	11723	10389	8252							
		THDF-36E428	1½	860	1.30	83	14567	13465	12158	10461							
		THDF-36E432	1½	860	1.61	84	16009	14876	13600	11881							
		THDF-36E412	1	1160	0.97	92	9659	8654	7670	6488	5220						
		THDF-36E416	1½	1160	1.31	94	12067	11284	10440	9364	7869						
		THDF-36E420	2	1160	1.81	95	14976	14209	13297	12191	10953	9275					
		THDF-36E424	3	1160	2.45	92	17347	16523	15652	14714	13564	12050					
		THDF-36E428	3	1160	3.19	90	19648	18858	18002	17058	16010	14829					
		THDF-36E432	5	1160	3.97	92	21594	20773	19905	18986	17949	16697	15119				
		THDF-36E412	5	1750	3.33	105	14571	13880	13225	12617	11975	11220	10424	9655	8858		
		THDF-36E416	5	1750	4.50	106	18204	17697	17172	16626	16069	15480	14811	13968	13001	10971	
		THDF-36E420	7½	1750	6.22	109	22593	22104	21585	21030	20425	19748	19015	18260	17473	15631	13167
		THDF-36E424	10	1750	8.44	107	26170	25633	25082	24515	23937	23347	22735	22081	21359	19648	17374
		THDF-36E428	10	1750	10.97	104	29642	29129	28599	28051	27482	26889	26269	25620	24938	23493	21772
	8 BLADES	THDF-36E812	3/4	860	0.70	87	6881	6056	5236	4278							
		THDF-36E816	1	860	0.91	87	9004	8240	7416	6375	5188						
		THDF-36E820	1½	860	1.18	90	11111	10502	9730	8692							
		THDF-36E824	1½	860	1.55	90	13532	12825	11974	10912							
		THDF-36E828	2	860	1.98	89	15586	14945	14186	13193	11526						
		THDF-36E832	3	860	2.56	88	17585	16911	16119	15089	13642						
		THDF-36E812	2	1160	1.71	93	9282	8665	8061	7455	6834	6122	5391	4668			
		THDF-36E816	3	1160	2.22	95	12145	11588	11008	10411	9754	8976	8141	7255			
		THDF-36E820	3	1160	2.94	98	14987	14554	14076	13533	12868	12098	11247	10171			
		THDF-36E824	5	1160	3.83	99	18253	17746	17196	16588	15886	15095	14262				
		THDF-36E828	5	1160	4.88	100	21023	20563	20065	19518	18901	18175	17293	16022	14239		
		THDF-36E832	7½	1160	6.28	97	23719	23235	22712	22141	21498	20744	19849	18765	17225		
		THDF-36E812	7½	1750	5.88	107	14003	13593	13185	12780	12380	11983	11583	11177	10770	9914	8917
		THDF-36E816	7½	1750	7.53	109	18322	17957	17585	17207	16822	16433	16039	15636	15215	14273	13203
		THDF-36E820	10	1750	9.90	110	22610	22330	22039	21735	21417	21083	20729	20347	19925	18965	17920

NOTES:
1. Performance certified is for installation Type A: Free inlet, free outlet.
2. Performance ratings do not include the effects of appurtenances (accessories).
3. The sound power ratings shown are in decibels, referred to 10^{-12} watts calculated per AMCA Standard 301.
4. Values shown are for inlet LwiA sound power levels for installation Type A: Free inlet, free outlet. Ratings do not include the effects of end correction.
5. Sound power values shown are at the peak cataloged pressure for each RPM.

Performance Data – Direct Drive

THDF – Die Cast Aluminum Propeller

SIZE	NO. OF BLADES	CATALOG NUMBER	MOTOR HP	FAN RPM	MAX. BHP	LwiA	STATIC PRESSURE (IN. W.G.)										
							0.000	0.125	0.250	0.375	0.500	0.625	0.750	0.875	1.000	1.250	1.500
							CFM	CFM	CFM	CFM	CFM	CFM	CFM	CFM	CFM	CFM	CFM
42	4 BLADES	THDF-42E412	1½	860	1.24	91	13206	11992	10631	8971							
		THDF-42E416	2	860	1.70	92	16193	15061	13883	12415							
		THDF-42E420	3	860	2.26	92	19152	18122	16979	15558	13582						
		THDF-42E424	3	860	2.98	89	21996	20898	19698	18313	16548						
		THDF-42E428	5	860	3.77	88	24643	23464	22275	20908	19046						
		THDF-42E432	5	860	4.59	91	26834	25649	24360	22926	21269	19329					
		THDF-42E412	3	1160	3.06	99	17813	16928	16006	15031	13915	12680	11383				
		THDF-42E416	5	1160	4.18	100	21842	21011	20161	19302	18379	17299	16041				
		THDF-42E420	7½	1160	5.55	100	25833	25088	24298	23464	22569	21548	20202	18693	17363		
		THDF-42E424	7½	1160	7.32	97	29669	28871	28034	27156	26225	25209	24049	22713	21281		
		THDF-42E428	10	1160	9.24	96	33239	32369	31492	30617	29711	28716	27526	26104			
		THDF-42E432	10	1160	11.27	99	36194	35331	34430	33487	32492	31434	30294	29053	27694	24571	
	8 BLADES	THDF-42E812	3	860	2.23	91	13214	12500	11672	10726	9846						
		THDF-42E816	3	860	2.78	93	16199	15489	14719	13873	12919	11796	10338				
		THDF-42E820	5	860	3.46	95	19204	18610	17922	17039	15815	14454					
		THDF-42E824	5	860	4.70	95	23088	22327	21523	20683	19772	18680	17257				
		THDF-42E828	7½	860	5.96	93	26516	25848	25115	24285	23299	22145	20795	19075			
		THDF-42E832	7½	860	7.30	93	29435	28647	27804	26899	25906	24769	23425				
		THDF-42E812	5	1160	5.47	99	17823	17308	16759	16165	15492	14781	14113	13466			
		THDF-42E816	7½	1160	6.81	101	21850	21332	20793	20228	19636	19012	18347	17634	16858	15012	
		THDF-42E820	10	1160	8.48	103	25904	25475	25016	24518	23969	23328	22529	21595	20645	18420	
		THDF-42E824	10	1160	11.52	103	31141	30584	30011	29419	28810	28189	27547	26867	26124	24319	
48	4 BLADES	THDF-48E412	2	860	1.66	94	16790	15044	13256	11169							
		THDF-48E416	3	860	2.25	94	21002	19605	18091	16057	13400						
		THDF-48E420	3	860	3.11	96	26015	24622	22936	20964	18706	15596					
		THDF-48E424	5	860	4.22	95	30039	28571	27027	25310	23166	20280					
		THDF-48E428	5	860	5.48	91	33982	32565	31022	29315	27440	25176					
		THDF-48E432	7½	860	6.81	94	37257	35795	34259	32602	30675	28332	25296				
		THDF-48E412	5	1160	4.09	100	22647	21309	20076	18819	17313	15765	14214	12482			
		THDF-48E416	7½	1160	5.52	102	28328	27313	26247	25145	23953	22483	20628	18638	16711		
		THDF-48E420	7½	1160	7.64	104	35090	34091	33009	31798	30425	28963	27439	25753	23698		
		THDF-48E424	10	1160	10.35	105	40518	39445	38335	37198	36023	34764	33350	31736	29883	24972	
	8 BLADES	THDF-48E812	3	860	2.94	94	16212	15117	14045	12963	11845	10545	9271				
		THDF-48E816	5	860	3.82	95	21192	20200	19167	18095	16893	15484	13989	12397			
		THDF-48E820	5	860	5.03	99	26160	25375	24504	23498	22261	20877	19314				
		THDF-48E824	7½	860	6.61	100	31772	30852	29851	28730	27438	26020	24520				
		THDF-48E828	10	860	8.39	98	36574	35735	34822	33811	32650	31272	29541	26880			
		THDF-48E832	10	860	10.78	97	41182	40295	39331	38268	37043	35604	33912	31735			
		THDF-48E812	7½	1160	7.22	102	21867	21053	20245	19448	18658	17857	17045	16216	15322	13332	11465
		THDF-48E816	10	1160	9.37	103	28584	27856	27110	26347	25572	24781	23952	23053	22056	19903	17605

NOTES:
1. Performance certified is for installation Type A: Free inlet, free outlet.
2. Performance ratings do not include the effects of appurtenances (accessories).
3. The sound power ratings shown are in decibels, referred to 10^{-12} watts calculated per AMCA Standard 301.
4. Values shown are for inlet LwiA sound power levels for installation Type A: Free inlet, free outlet. Ratings do not include the effects of end correction.
5. Sound power values shown are at the peak cataloged pressure for each RPM.

Dimensional Data – Upblast

Belt Driven – TUB/TUBSH

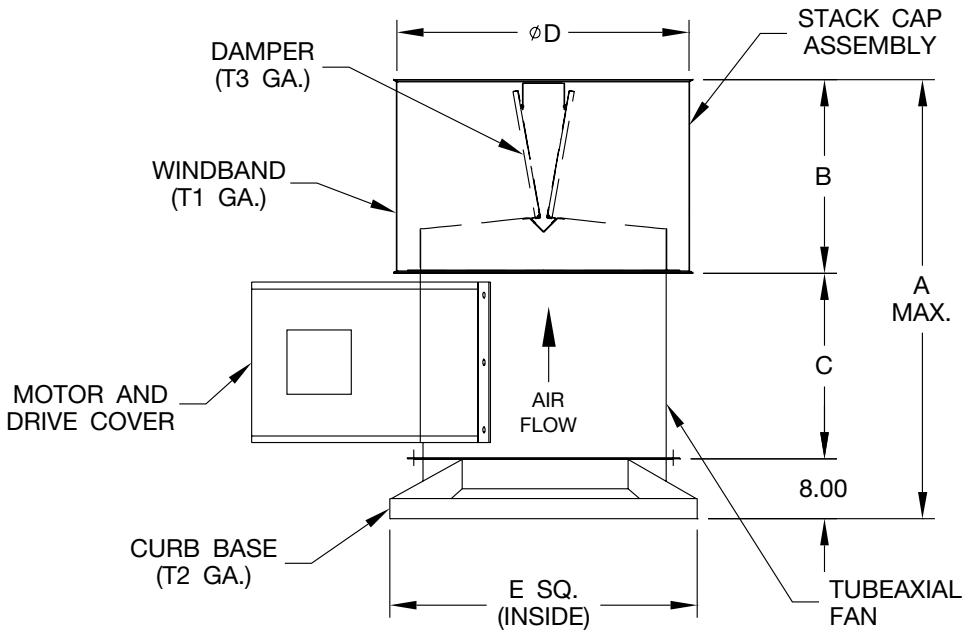

SIZE	A MAX.	B	C	D	E	T1	T2	T3	SHAFT SIZE	MAX. FRAME
14	43¾	16¾	19	20 1/16	23⅞	20	16	24	¾	56
16	44¾	17¾	19	22¼	23⅞	20	16	24	¾	143T
18	45¾	18¾	19	24 5/16	27⅞	20	16	24	¾	145T
21	49¼	20¼	21	27⅝	31⅜	20	16	24	¾	145T
24	51	22	21	31	35⅜	20	16	24	1	184T
30	59¼	25¼	26	37⅛	42⅜	20	16	20	1	213T
36	63¾	28¾	27	43⅜	48⅜	20	16	20	1 3/16	215T
42	71	32	31	49⅝	54⅜	20	16	20	1 7/16	215T
48	78	35	35	55⅝	60⅜	20	14	20	1 7/16	254T
54	86½	38½	40	62¼	74⅜	18	14	20	1 7/16	256T
60	90	42	40	68¼	74⅜	18	14	20	1 11/16	284T

Dimensions are not to be used for construction. D-4850-1B

Dimensional Data – Upblast

Direct Drive – TUD

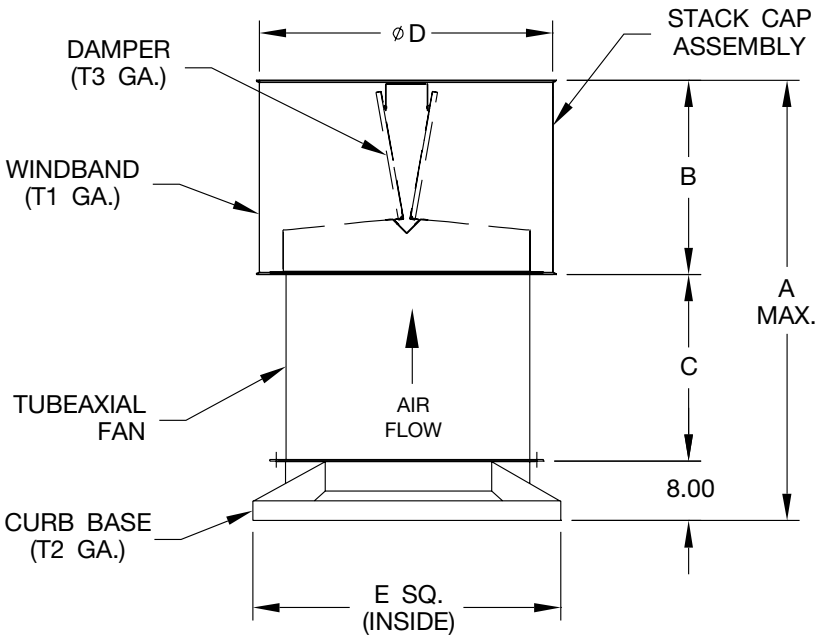

SIZE	A MAX.	B	C	D	E	T1	T2	T3	MAX. HP	MAX. FRAME
14	43¾	16¾	19	20 1/16	23⅞	20	16	24	¾	56
16	44¾	17¾	19	22¼	23⅞	20	16	24	1	143T
18	45¾	18¾	19	24 5/16	27⅞	20	16	24	1	145T
21	49¼	20¼	21	27⅝	31⅜	20	16	24	1½	145T
24	51	22	21	31	35⅜	20	16	24	3	184T
30	59¼	25¼	26	37⅛	42⅜	20	16	24	5	184T
36	63¾	28¾	27	43⅜	48⅜	20	16	20	10	215T
42	71	32	31	49⅝	54⅜	20	16	20	10	256T
48	78	35	35	55⅝	60⅜	20	14	20	10	256T

Dimensions are not to be used for construction.

D-4850-2B

Dimensional Data – Hooded/Filtered

Belt Driven – THB/THBF

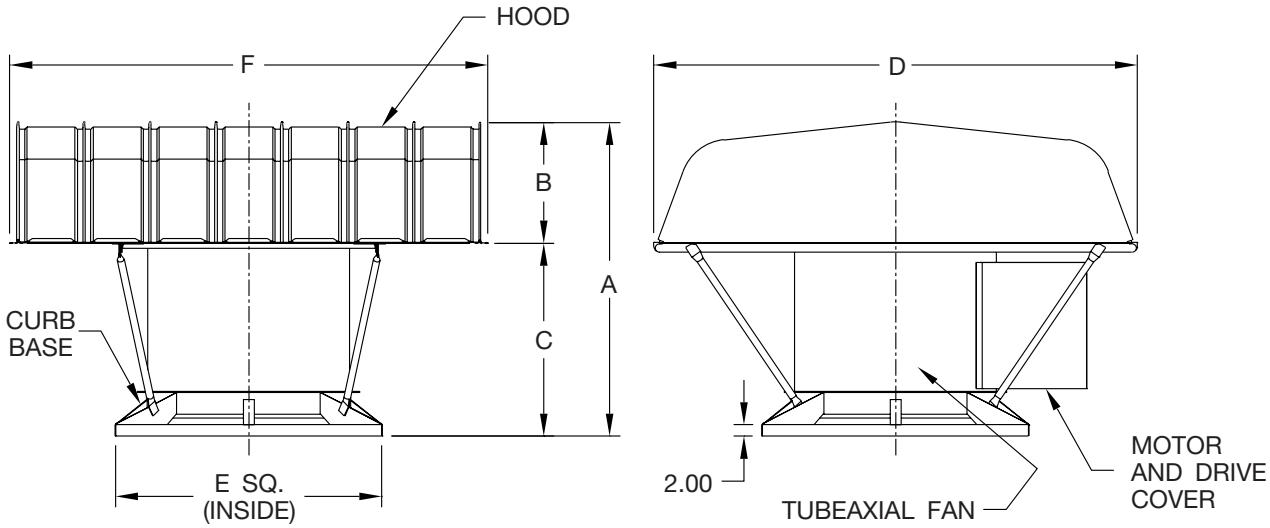

SIZE	A MAX.		B		C		D		E		F		SHAFT SIZE	MAX. FRAME
	THB	THBF	THB	THBF	THB	THBF	THB	THBF	THB	THBF	THB	THBF		
14	38¾	—	11¾	—	27	—	40	—	23⅞	—	39	—	¾	56
16	38¾	—	11¾	—	27	—	40	—	23⅞	—	39	—	¾	143T
18	39¾	—	12¾	—	27	—	48	—	27⅞	—	51	—	¾	145T
21	44⅜	44¾	15¾	16⅛	28⅝	28⅝	54	54	31⅜	31⅜	51	51	¾	145T
24	46⅝	46⅞	17¾	18	28⅞	28⅞	66	66	35⅜	35⅜	63	63	1	184T
30	53⅞	54⅛	19¾	20	34⅛	34⅛	75	78	42⅜	42⅜	75	87	1	213T
36	56⅞	57⅛	21¾	22	35⅛	35⅛	88	94	48⅜	48⅜	87	87	1 3/16	215T
42	62⅞	63⅛	23¾	24	39⅛	39⅛	86	93	54⅜	54⅜	99	99	1 7/16	215T
48	66 15/16	67 3/16	23¾	24	43 3/16	43 3/16	93	112	60⅜	60⅜	111	111	1 7/16	254T
54	71 15/16	72 3/16	23¾	24	48 3/16	48 3/16	112	124	74⅜	74⅜	111	123	1 7/16	256T
60	74 7/16	74 11/16	26¼	26½	48 3/16	48 3/16	124	136	74⅜	74⅜	123	135	1 11/16	284T

Dimensions are not to be used for construction. D-4850-3E

Dimensional Data – Hooded/Filtered

Direct Drive – THD/THDF

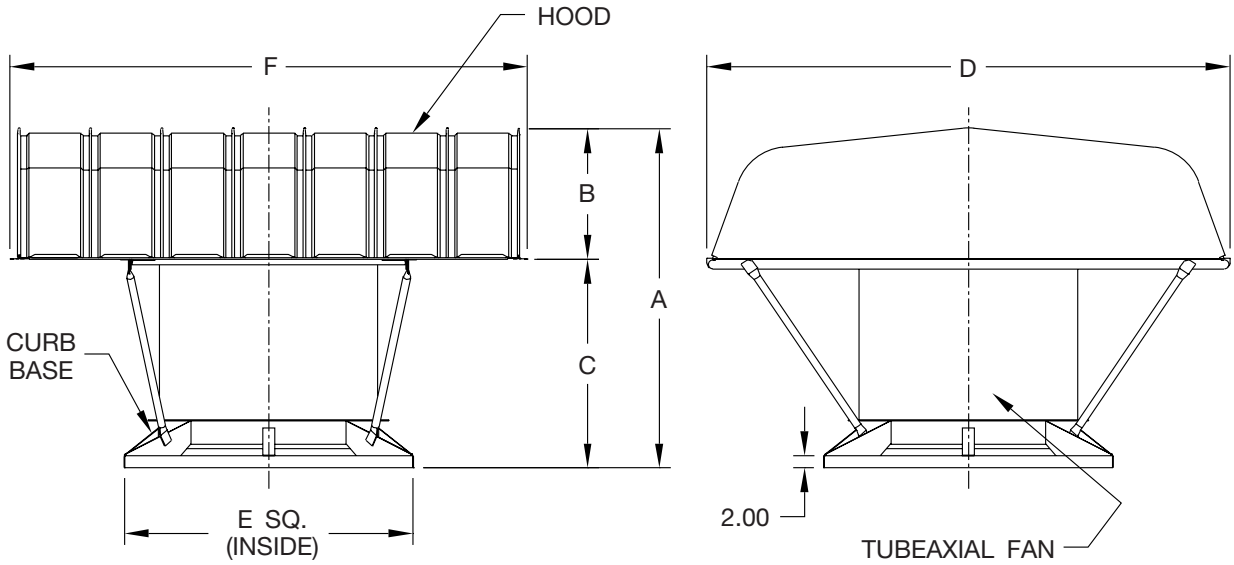

SIZE	A MAX.		B		C		D		E		F		MAX. FRAME
	THD	THDF	THD	THDF	THD	THDF	THD	THDF	THD	THDF	THD	THDF	
14	40 1/8	—	13 1/8	—	27	—	48	—	23 7/8	—	51	—	56
16	40 1/8	—	13 1/8	—	27	—	48	—	23 7/8	—	51	—	143T
18	40 1/8	—	13 1/8	—	27	—	48	—	27 7/8	—	51	—	145T
21	44 3/4	44 3/4	16 1/8	16 1/8	28 5/8	28 5/8	54	54	31 3/8	31 3/8	51	51	145T
24	46 7/8	46 7/8	18	18	28 7/8	28 7/8	66	66	35 3/8	35 3/8	63	63	184T
30	54 1/8	54 1/8	20	20	34 1/8	34 1/8	75	78	42 3/8	42 3/8	75	87	184T
36	57 1/8	57 1/8	22	22	35 1/8	35 1/8	88	94	48 3/8	48 3/8	87	87	215T
42	63 1/8	63 1/8	24	24	39 1/8	39 1/8	86	93	54 3/8	54 3/8	99	99	256T
48	67 3/16	67 3/16	24	24	43 3/16	43 3/16	93	112	60 3/8	60 3/8	111	111	256T

Dimensions are not to be used for construction.

D-4850-4D

Dimensional Data – Accessories

Roof Curb

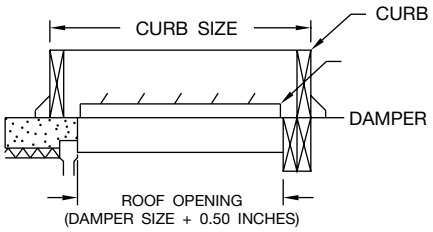

SIZE	CURB DIMENSIONS
14	22.50 x 22.50
16	22.50 x 22.50
18	26.50 x 26.50
21	30 x 30
24	34 x 34
30	41 x 41
36	47 x 47
42	53 x 53
48	59 x 59
54	73 x 73
60	73 x 73

Note:
1. Curbs have 1½" thick insulation, wood nailer (canted) or 3/16" polystyrene gasket (self-flashing) and damper tray as standard. A 12" high curb is required when using a motorized damper.

Backdraft Damper

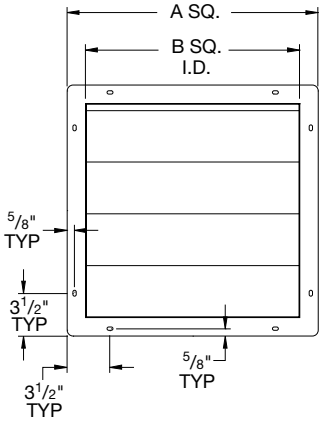

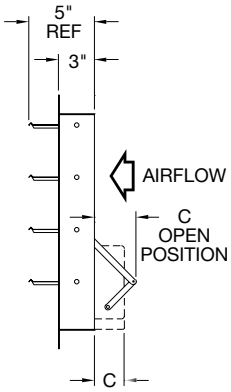

SIZE	A SQ.	B SQ.	C	NO. OF PANELS
14	18.50	16	6	1
16	18.50	16	6	1
18	22.50	20	6	1
21	26	23.50	6	1
24	30	27.50	6	1
30	37	34.50	6	1
36	43	40.50	7.50	1
42	49	46.50	7.50	2
48	55	52.50	7.50	2
54	69	66.50	7.50	2
60	69	66.50	7.50	2

Notes:
1. Exhaust damper shown (with front flange).
2. Supply damper has rear flange.

Typical Specifications – Upblast (TUD, TUB, TUBSH)

Upblast Tubeaxial Roof Ventilators shall be model TUD (standard direct drive), model TUB (standard belt driven), model TUBSH (smoke and heat) as manufactured by Twin City Fan & Blower, Minneapolis, Minnesota.

PERFORMANCE — Performance ratings shall conform to AMCA Standard 205 (fan efficiency grade), 211 (air performance) and 311 (sound performance). Fans shall be tested in accordance with ANSI/AMCA Standard 210 (air performance) and 300 (sound performance) in an AMCA accredited laboratory. Fans shall be licensed to bear the AMCA certified ratings seal for both sound and air, and fan efficiency grade (FEG).

Models TUD and TUB shall be UL 705 listed. Model TUBSH shall be UL listed for Smoke Control Systems (500°F for 4 hours and 1000°F for 15 minutes). Fans shall bear a permanently attached nameplate displaying model and serial number of the unit for future identification.

CONSTRUCTION — Housings, curb caps, and wind bands shall be constructed of heavy gauge, continuously welded steel to prevent air leakage. Motor and bearing supports shall be constructed of heavy-gauge steel and shall be suitably braced to prevent vibration or pulsation. Butterfly dampers shall contain a splash guard over the pivot area to protect against rain entry. Butterfly damper blades on models TUD and TUB shall be aluminum (sizes 14-36) and galvanized steel (sizes 42-60). Butterfly dampers on model TUBSH shall be galvanized steel as standard. Model TUBSH shall be capable operating continuously at 200°F to 500°F.

PROPELLERS — Propellers on model TUD shall be constructed of or cast aluminum blades and hubs. Propellers on model TUB shall be constructed of fabricated steel or cast aluminum blades and hubs. Propellers on model TUBSH shall be fabricated steel blades and hubs. Propellers shall be secured to the fan shaft with a taperlock bushing.

SHAFTS (TUB and TUBSH Only) — Shafts shall be AISI 1045 cold rolled steel, accurately turned, ground, polished, and ring gauged for accuracy. Shafts shall be sized for the first critical speed of at least 1.43 times the maximum speed.

BEARINGS (TUB and TUBSH Only) — Bearings are to be pillow block, heavy-duty, anti-friction, self-aligning, grease lubricated, ball type. Each fan's bearings are sized with a minimum average life, per AFBMA, in excess of 200,000 hours when operating at the maximum RPM of the fan size.

DRIVES (TUB and TUBSH Only) — Motor sheaves shall be cast iron, and supplied as either variable pitch or fixed pitch. Drives and belts on model TUB shall be rated for a minimum of 150% of the required motor HP. Motor sheaves on model TUBSH shall be cast iron, fixed pitch as standard (variable pitch optional). Drives and belts on model TUBSH shall be rated for a minimum of 200% of the required motor HP and shall be two-groove minimum.

MOTORS — All motors shall be single phase or three phase induction, permanently lubricated, heavy-duty, ball bearing type, closely matched to the fan load and provided at the voltage, phase, hertz, and enclosure as provided on the fan schedule. Direct drive motors shall be split phase and capacitor start.

FINISH AND COATING — The entire fan assembly, excluding the shaft, shall be thoroughly degreased and deburred before application of a rust-preventative primer. After the fan is completely assembled, a finish coat of paint shall be applied to the entire assembly. The fan shaft shall be coated with a petroleum-based rust protectant. Aluminum components shall be unpainted. The fan shaft on models TUB and TUBSH shall be coated with a petroleum-based rust protectant.

ACCESSORIES — When specified, accessories such as fusible link assembly, magnetic damper latches, access door, shaft seal, spark resistant construction, roof curb and disconnect switch shall be provided by Twin City Fan to maintain one source responsibility.

FACTORY RUN TEST — All fans prior to shipment shall be completely assembled and test run as a unit at operating speed or maximum RPM allowed for the particular construction type. Each propeller shall be statically and dynamically balanced in accordance with ANSI/AMCA 204-96 "Balance Quality and Vibration Levels for Fans" to Fan Application Category BV-3, Balance Quality Grade G6.3. Balance readings shall be taken by electronic type equipment in the axial, vertical, and horizontal directions on each of the bearings. Records shall be maintained and a written copy shall be available upon request.

GUARANTEE — The manufacturer shall guarantee the workmanship and materials for at least one (1) year from startup or eighteen (18) months from shipment, whichever occurs first.

Typical Specifications – Hooded (THD, THB, THDF, THBF)

Hooded Tubeaxial Roof Ventilators shall be model THD (standard direct drive), model THB (standard belt driven), model THDF (filtered supply direct drive), model THBF (filtered supply belt driven) as manufactured by Twin City Fan & Blower, Minneapolis, Minnesota.

PERFORMANCE — Fans shall be tested in accordance with ANSI/AMCA Standard 210 (air performance) and 300 (sound performance) in an AMCA accredited laboratory.

Models THD, THB, THDF, THBF shall be UL 705 listed. Fans shall bear a permanently attached nameplate displaying model and serial number of the unit for future identification.

CONSTRUCTION — Housings shall be constructed of heavy gauge, continuously welded steel to prevent air leakage. Motor and bearing supports shall be constructed of heavy-gauge steel and shall be suitably braced to prevent vibration or pulsation. Hoods shall be constructed of heavy gauge galvanized steel.

PROPELLERS — Propellers shall be constructed of fabricated steel or cast aluminum blades and hubs. Propellers shall be secured to the fan shaft with a taperlock bushing.

SHAFTS (THB and THBF Only) — Shafts shall be AISI 1045 cold rolled steel, accurately turned, ground, polished, and ring gauged for accuracy. Shafts shall be sized for the first critical speed of at least 1.43 times the maximum speed.

BEARINGS (THB and THBF Only) — Bearings are to be pillow block, heavy-duty, anti-friction, self-aligning, grease lubricated, ball type. Each fan's bearings are sized with a minimum average life, per AFBMA, in excess of 200,000 hours when operating at the maximum RPM of the fan size.

DRIVES (THB and THBF Only) — Motor sheaves shall be cast iron, and supplied as either variable pitch or fixed pitch. Drives and belts shall be rated for a minimum of 150% of the required motor HP.

MOTORS — All motors shall be single phase or three phase induction, permanently lubricated, heavy-duty, ball bearing type, closely matched to the fan load and provided at the voltage, phase, hertz, and enclosure as provided on the fan schedule. Direct drive motors shall be split phase and capacitor start.

FINISH AND COATING — The entire fan assembly, excluding the shaft and hood, shall be thoroughly degreased and deburred before application of a rust-preventative primer. After the fan is completely assembled, a finish coat of paint shall be applied to the entire assembly. Aluminum components shall be unpainted. Hoods shall be galvanized steel. The fan shaft on models THB and THBF shall be coated with a petroleum-based rust protectant.

ACCESSORIES — When specified, accessories such access door, shaft seal, backdraft and motorized dampers, spark resistant construction, curb extension, roof curb and disconnect switch shall be provided by Twin City Fan to maintain one source responsibility.

FACTORY RUN TEST — All fans prior to shipment shall be completely assembled and test run as a unit at operating speed or maximum RPM allowed for the particular construction type. Each propeller shall be statically and dynamically balanced in accordance with ANSI/AMCA 204-96 "Balance Quality and Vibration Levels for Fans" to Fan Application Category BV-3, Balance Quality Grade G6.3. Balance readings shall be taken by electronic type equipment in the axial, vertical, and horizontal directions on each of the bearings. Records shall be maintained and a written copy shall be available upon request.

GUARANTEE — The manufacturer shall guarantee the workmanship and materials for at least one (1) year from startup or eighteen (18) months from shipment, whichever occurs first.

INDUSTRIAL PROCESS AND COMMERCIAL VENTILATION SYSTEMS

CENTRIFUGAL FANS | UTILITY SETS | PLENUM & PLUG FANS | INLINE CENTRIFUGAL FANS

MIXED FLOW FANS | TUBEAXIAL & VANEAXIAL FANS | PROPELLER WALL FANS | PROPELLER ROOF VENTILATORS

CENTRIFUGAL ROOF & WALL EXHAUSTERS | CEILING VENTILATORS | GRAVITY VENTILATORS | DUCT BLOWERS

RADIAL BLADED FANS | RADIAL TIP FANS | HIGH EFFICIENCY INDUSTRIAL FANS | PRESSURE BLOWERS

LABORATORY EXHAUST FANS | FILTERED SUPPLY FANS | MANCOOLERS | FIBERGLASS FANS | CUSTOM FANS

TCF
TWIN CITY FAN

TWIN CITY FAN & BLOWER

WWW.TCF.COM

5959 TRENTON LANE N | MINNEAPOLIS, MN 55442 | PHONE: 763-551-7600 | FAX: 763-551-7601

©2018 Twin City Fan Companies, Ltd., Minneapolis, MN. All rights reserved. Catalog illustrations cover the general appearance of Twin City Fan & Blower products at the time of publication and we reserve the right to make changes in design and construction at any time without notice.