TCF
Twin City Fan

INDUSTRIAL PROCESS AND
COMMERCIAL VENTILATION SYSTEMS

SQUARE INLINE CENTRIFUGAL FANS

DSI | BSI

CATALOG 4205 | OCTOBER 2018

WWW.TCF.COM

Overview

DSI | BSI

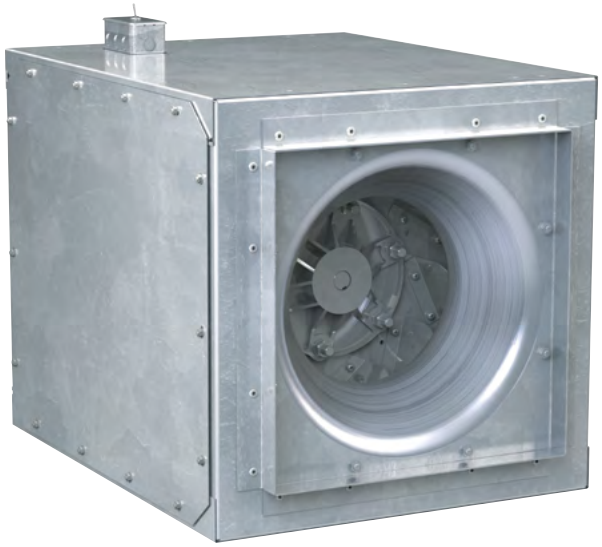

DSI
Direct Drive

Now Available with

GRIDSMART™
EC MOTORS

see page 8

TCF
TWIN CITY FAN

All DSI and BSI models are UL/cUL 705 listed, for electrical, File No. E158680.

Twin City Fan & Blower certifies that the Models DSI and BSI shown herein are licensed to bear the AMCA Seal. The ratings shown are based on tests and procedures performed in accordance with AMCA Publication 211 and AMCA Publication 311 and comply with the requirements of the AMCA Certified Ratings Program.

Fan Efficiency Grade (FEG) certification applies to Model DSI Sizes 135A, 135AE, 150A, 150AE, 150AN, 150ANE, 165A, 165AE, 165AN and 165ANE and Model BSI, Sizes 080A, 090A, 100A, 120A, 120AHP, 135A, 135AHP, 150A, 150AHP, 165A, 165AHP, 180A, 180AHP, 210A, 210AHP, 225A, 225AHP, 245A, 245AHP, 270A, 270AHP, 300A, 300AHP, 330A, 330AHP, 365A, 365AHP, 402A, 402AHP.

Twin City Fan & Blower's Model DSI direct drive and Model BSI belt driven square inline fans are specifically designed for duct applications handling relatively clean air, including supply, exhaust and return air systems. These fans offer high efficiency and quiet operation in a compact design that can be mounted in any position (horizontal, vertical or angular). Duct collars are provided for easy mounting without the need for square to round duct transitions. The units can be easily serviced through the side access panels without removing duct connections.

Square inline centrifugal units feature high efficient, non-overloading, backward inclined centrifugal wheels precisely matched to a spun venturi. All wheels are statically and dynamically balanced. Units are manufactured under strict quality assurance standards to insure cataloged performance and years of maintenance-free operation. Square inline fans are not intended for outdoor applications.

Typical Applications Include

General HVAC (exhaust, filtration, return and supply, air of commercial buildings), Air Pollution Control, Airport Exhaust, Automotive, Fertilizer, Food & Beverage, Laboratory Exhaust, Metal & Mineral Processing, Office Exhaust, Restroom Exhaust, Warehouse Exhaust and Water Treatment

Wheel Types

Backward Inclined

Optional Construction

Spark Resistant Construction (Type B and C), Easy Access Construction

Certifications

AMCA Sound/Air and FEG, UL 705 Listed for Electrical, OSHPD Seismic Preapproval per OSP-0271-10

For complete product performance, drawings and available accessories, download our Fan Selector program at tcf.com.

Overview

DSI | BSI

Model DSI

Available in 10 sizes from 080 through 165
Airflow to 5,800 CFM
Static pressure to 2" w.g.

General HVAC
(90 Degree Turn)

Model BSI

Available in 29 sizes from 080 through 402
Airflow to 27,400 CFM
Static pressure to 3.5" w.g.

General HVAC
(Straight Inline)

CONSTRUCTION FEATURES

Housings - Housing assembly features heavy-gauge galvanized steel construction

Removable Side Panels - Removable side panels provide easy access for service and maintenance without the need to remove duct connections. Complete removal of the power assembly is also possible through side access panels. Side panels can provide a 90-degree side discharge. Requires optional side discharge accessory.

Duct Collars - Duct collars provide ready attachment to ductwork and eliminate the need for square to round duct transitions.

Belt Tube/Bearing Cover - Constructed of heavy gauge galvanized steel, the belt tube and bearing cover enclose the belts, fan sheave and bearings within the airstream (Model BSI).

Drive Frame - Motor and drive frame are constructed of heavy gauge galvanized steel. The pivoting motor base makes for simple belt tensioning (Model BSI).

Wheel - Backward inclined non-overloading, all-aluminum wheel and hub statically and dynamically balanced to assure long life and quiet operation.

Mounting Brackets - Galvanized steel mounting brackets for easy mounting in horizontal or vertical position.

Pulleys - Heavy-duty cast iron adjustable pulleys to permit speed variation (Model BSI).

Shaft - Precision ground and polished with a first critical speed of at least 125% of the fan's maximum operating speed (Model BSI).

Bearings - All models are furnished with prelubricated cast iron pillow block bearings with zerk fittings, designed for an average life (L-50) of 500,000 hours or more at maximum cataloged operating speeds (Model BSI).

Disconnect Switch - Mounted and prewired NEMA 1 disconnect switch provided as standard for servicing the unit without the danger of an accidental start.

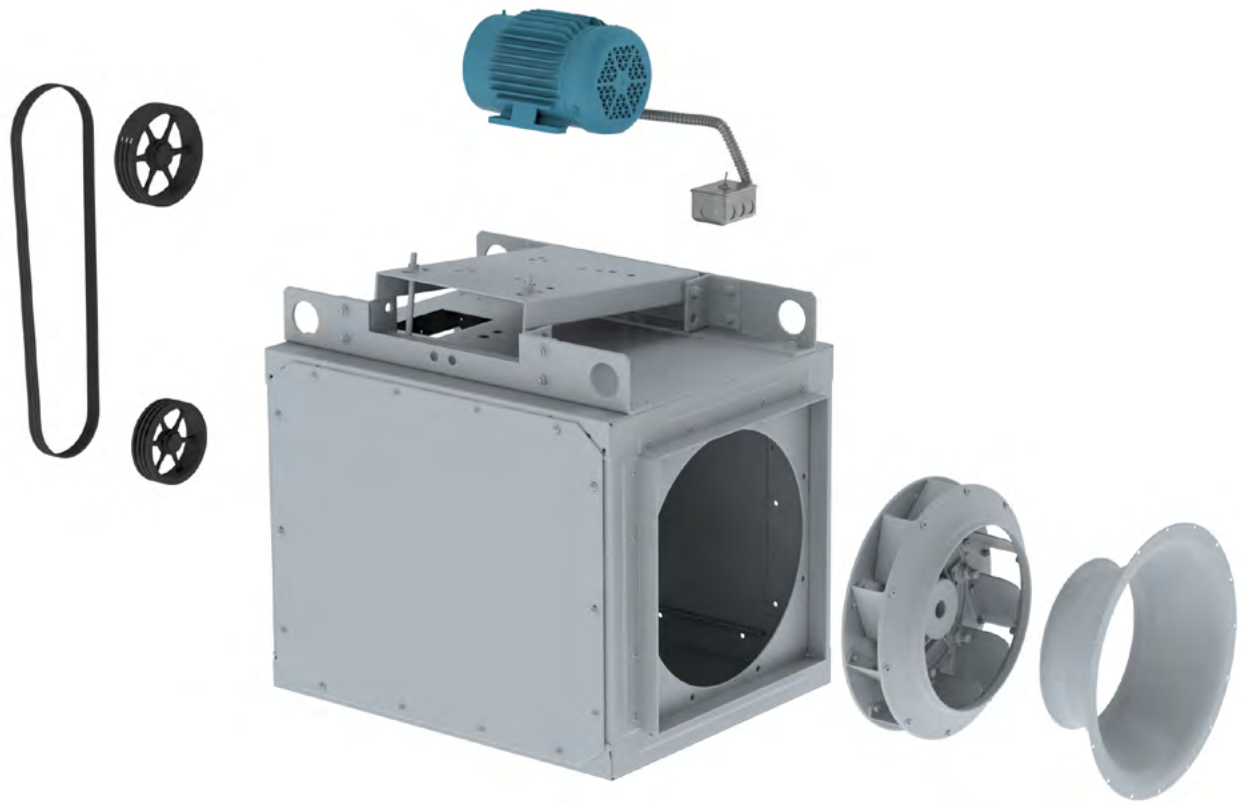

Disconnect switches provide positive electrical shutoff during fan cleaning or maintenance.

NEMA 1 Disconnect Switch (Standard)

A NEMA 1 disconnect switch is available shipped loose for field mounting and wiring or factory mounted and wired with ODP or TEFC motors.

NEMA 1 Disconnect Switch

NEMA 3R Disconnect Switch

A NEMA 3R, rain proof, disconnect is available shipped loose for field mounting and wiring or factory mounted and wired externally.

NEMA 3R Disconnect Switch

NEMA 4 Disconnect Switch

A NEMA 4, water and dust tight, disconnect is available shipped loose for field mounting and wiring or factory mounted and wired externally.

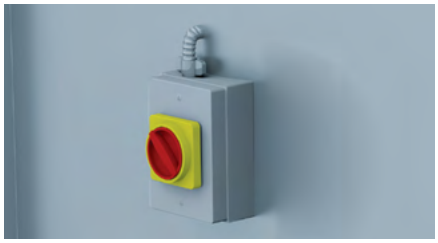

NEMA 4 Disconnect Switch

NEMA 7/9 Disconnect Switch

A NEMA 7/9 disconnect switch is recommended on fans with explosion proof motors. The NEMA 7/9 switch is designed for use with fans operating in hazardous environments. Available shipped loose for field mounting and wiring. (Not shown.)

DSI
Direct Drive

TCF
TWIN CITY FAN

OPTIONS/ACCESSORIES

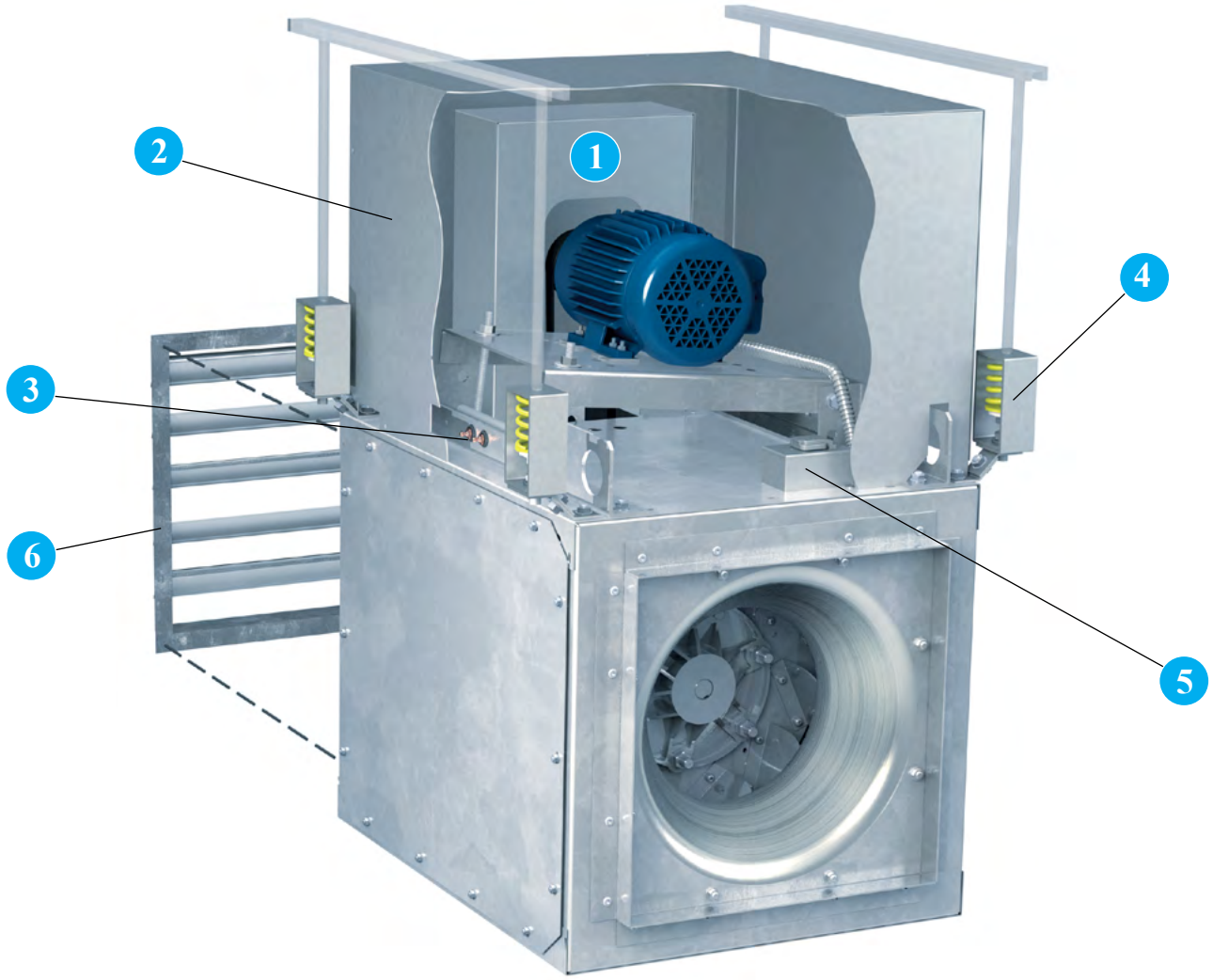

1 **Belt Guard** is a formed galvanized steel guard available to cover the drive assembly on Model BSI. Belt guard is offered in lieu of motor cover.

2 **Motor Cover** is a formed galvanized steel cover available on Model BSI to completely cover the motor and drives. Motor cover serves as OSHA belt guard.

3 **Extended Lube Lines** Exterior mounting zerk fittings are available with lines to the fan shaft bearings (Model BSI) for relubrication from outside the unit.

4 **Vibration Isolators** Spring or neoprene type vibration isolators are available for ceiling suspended or floor mounted installations.

5 **NEMA 3R** rain proof safety disconnect switch is available for positive electrical shutoff of the fan and the protection of service personnel.

6 **Backdraft Dampers**, with automatic or motorized operation, feature felt-edged damper blades for quiet operation. Damper frames are constructed of galvanized steel and blades are constructed of 26-gauge aluminum. All dampers ship loose for field mounting in ductwork.

Motorized dampers are recommended for low CFM applications to assure unrestricted airflow. Motorized dampers are available with 115, 208, 230, 460, 575 or 24 volt service. End switches are available. See dimensional data for sizing.

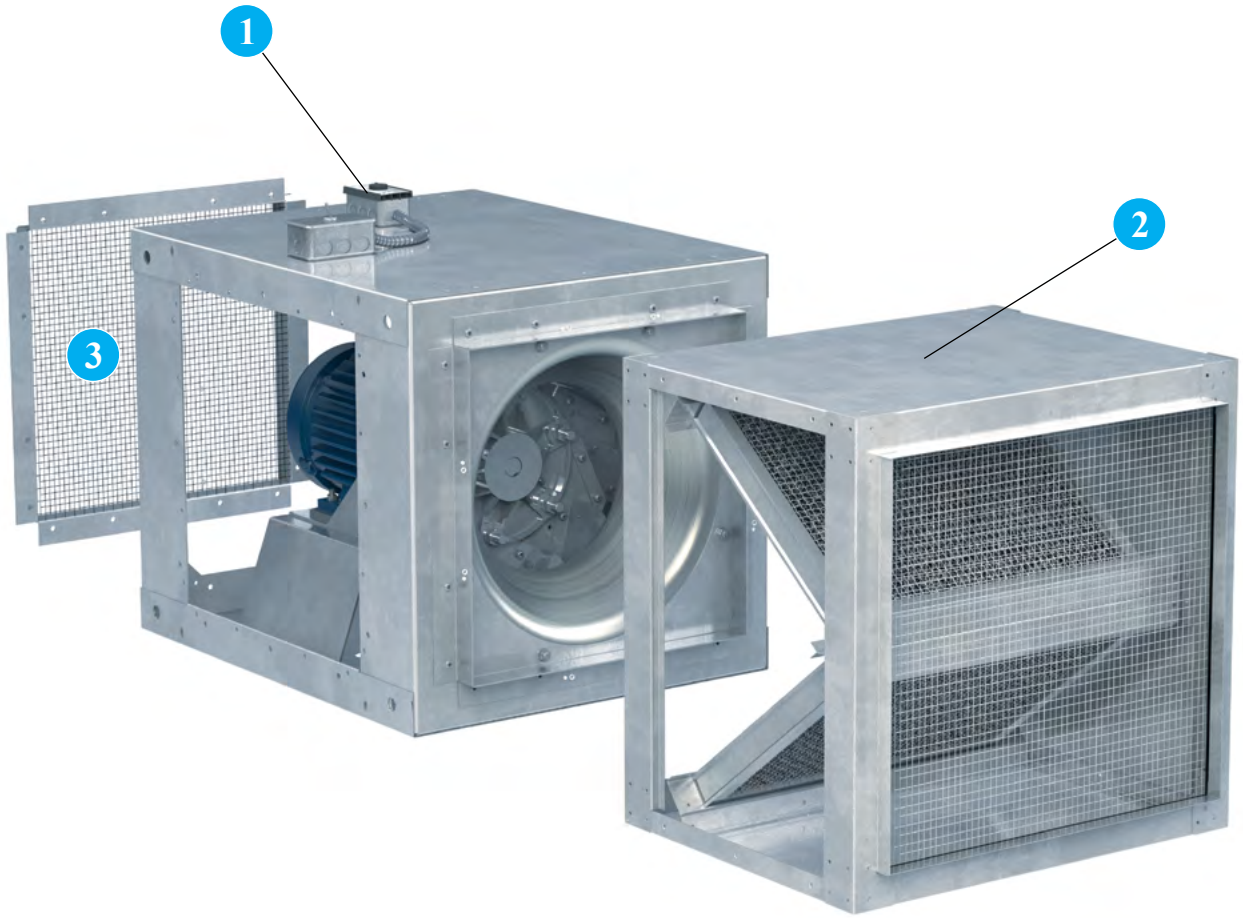

1 **Variable Speed Control** Variable speed control is an optional accessory on all DSI models, to allow the adjustment of airflow for system balancing. Variable speed controllers are solid-state (Tri-ac) design and are designed to start the motor on high speed for better startup characteristics. Variable speed controls can be shipped separately, factory installed, or field installed on the unit at a later date. Motor must be ODP 115V, PSC or shaded pole type.

2 **Filter Box** A filter box containing two inch aluminum wire mesh, removable and washable filters is available for attachment to the fan inlet side. The filter box is constructed of galvanized steel, with duct collars for easy mounting and removable side panels for easy filter cleaning or replacement. Disposable paper filters are also available. One inch filters are available on either type. For filter box pressure drops contact factory. See page 26 for dimensional data.

3 **Outlet Guard** Inlet and outlet guards are available for all models. Guards mount inside the unit and do not interfere with the attachment of ductwork.

Other Accessories Include:

- Special Coatings
- Insulated Housings
- Aluminum Construction
- Stainless Steel Hardware
- NEMA 4 & 7/9 Disconnect Switches

ELECTRONICALLY COMMUTATED MOTORS

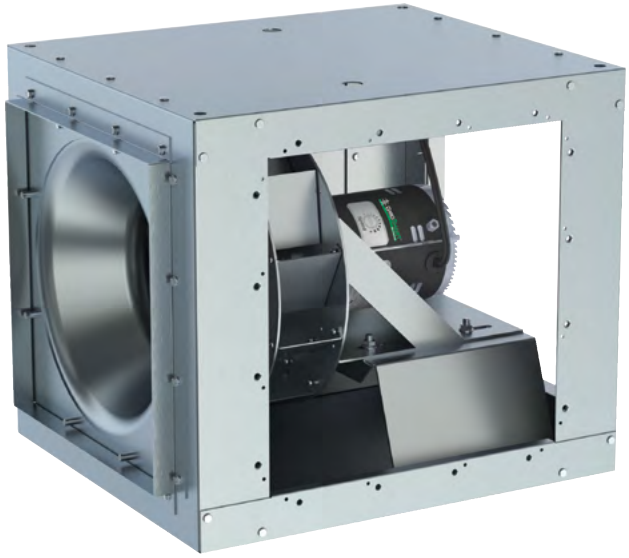

Model DSI
With GridSmart™ EC Motor

Twin City Fan & Blower offers its own line of custom engineered Electronically Commutated (EC) motors. Electronic commutation is the latest motor technology to be used in direct drive fans. Also known in the industry as Brush Free or Brushless DC, the EC motors utilize an electronic circuit board to control the functionality of the motor. The motor operates off of single phase AC power, which is converted to DC power within the motor's circuitry. TCF has motor options available for 115V, 208-230V or 277V single phase electrical power. The result is a highly efficient motor, even at part load, with an expanded speed control range and a variety of speed control options from which to choose. EC motors are available in ODP, TENV and TEFC enclosures.

GridSmart™ EC Motors

TCF Twin City Fan

Benefits

- Efficiencies up to 85%
- Constant efficiency as the motor speed is varied
- Up to 66% energy savings over traditional PSC motors
- Performance range comparable to a belt drive fan with reduced maintenance benefits of a direct drive fan
- 80% usable turndown range as compared with 40% maximum on PSC motors
- Soft start gives fans smooth, quiet start
- Lower operating temperatures result in longer life and reduces energy consumption
- Heavy-duty ball bearings are permanently lubricated
- Elimination of VFD results in lower initial cost

EC Motor Options

1/6HP to 1HP

- 1/6HP: 115V, single phase
- 1/4HP – 1HP: 115V, 208-230V, 277V, single phase
- ODP or TENV Enclosure
- Motor mounted speed control dial as standard
- 0-10VDC control leads as standard
- Available with remote mounted speed control dial

1HP & 2HP

- 1HP: 115V, 208-230V, single phase
- 2HP: 208-230V, single phase
- TEFC enclosure (totally enclosed fan cooled)
- Available with motor mounted speed dial or 0-10VDC control lead

1HP & 2HP
GridSmart™ EC Motors

1/6HP to 1HP
GridSmart™ EC Motors

Side discharge kits (including panels, mounting collars and necessary hardware) are available to provide 1-way, 2-way or 3-way discharges. This option provides exceptional adaptability for any installation, as well as avoiding the system effect of disrupted airflow when the ductwork has to take a 90-degree turn.

Configurations

OPTION	FIGURE	CONFIGURATION
Standard	A	Rear
1-Way	B	Left
	C	Right
2-Way	D	Left and Right
	E	Left and Rear
	F	Right and Rear
3-Way	G	Left, Right and Rear

NOTE: Performance will change depending on the position of the discharge. See correction factor table below. Percentages based on (inline) cataloged performance, but are not AMCA certified. Always check BHP when selecting motor HP and fan size.

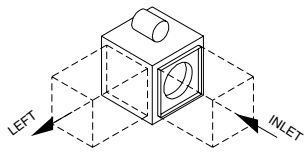

FIG. B

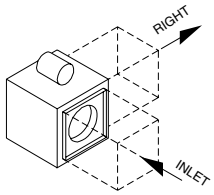

FIG. C

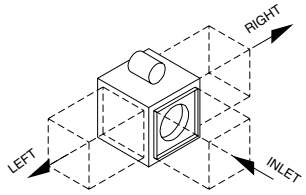

FIG. D

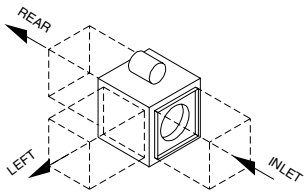

FIG. E

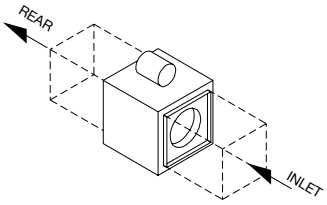

Fig. A

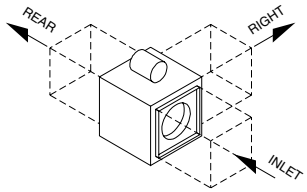

FIG. F

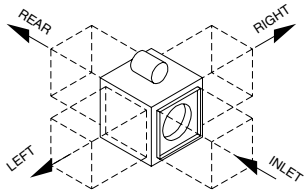

FIG. G

Performance Correction Factors

DISCHARGE	0.50" SP		1.00" SP		1.50" SP		2.00" SP		AVG.	
	CFM	BHP	CFM	BHP	CFM	BHP	CFM	BHP	CFM	BHP
1-Way	110.7%	113.0%	114.0%	110.8%	115.8%	108.5%	120.0%	102.3%	115.1%	108.7%
2-Way	114.7%	106.5%	118.1%	109.7%	120.3%	112.4%	126.8%	114.0%	120.0%	110.7%
3-Way	113.2%	105.9%	117.4%	109.7%	121.6%	113.0%	127.1%	114.0%	119.8%	110.7%

NOTE: The performance correction factors shown above are not licensed to bear the AMCA Certified Ratings Seal.

Duct Openings

MODEL BSI	MODEL DSI	LEFT AND RIGHT DISCHARGE			REAR DISCHARGE/INLET		
		DUCT COLLAR		DUCT SIZE REQUIRED	DUCT COLLAR		DUCT SIZE REQUIRED
		WIDTH	HEIGHT		WIDTH	HEIGHT	
080	**080**	11.88	11.88	12 x 12	11.88	11.88	12 x 12
090	**090**	11.88	11.88	12 x 12	11.88	11.88	12 x 12
100	**100**	13.88	13.88	14 x 14	13.88	13.88	14 x 14
120	**120**	15.88	15.88	16 x 16	15.88	15.88	16 x 16
135	**135**	17.88	17.88	18 x 18	17.88	17.88	18 x 18
150	**150**	19.88	19.88	20 x 20	19.88	19.88	20 x 20
165	**165**	22.88	22.88	23 x 23	22.88	22.88	23 x 23
180	**—**	23.88	23.88	24 x 24	23.88	23.88	24 x 24
210	**—**	27.88	27.88	28 x 28	27.88	27.88	28 x 28
225	**—**	25.88	28.88	26 x 29	29.88	29.88	30 x 30
245	**—**	27.88	31.88	28 x 32	32.88	32.88	33 x 33
270	**—**	29.88	33.88	30 x 34	35.88	35.88	36 x 36
300	**—**	29.88	37.88	30 x 38	39.88	39.88	40 x 40
330	**—**	31.88	39.88	32 x 40	43.88	43.88	44 x 44
365	**—**	32.88	41.88	33 x 42	45.88	45.88	46 x 46
402	**—**	34.88	46.88	35 x 47	51.88	51.88	52 x 52

NOTE: Damper size should be 1/8" less than duct size required, or same size as duct collar.

DSI – 60 Hz

EC MOTOR SIZE	EC MOTOR MTR HP	PSC MOTOR SIZE	PSC MOTOR MTR HP	RPM	MAX. BHP	STATIC PRESSURE (INCHES W.G.) 0	0.125	0.25	0.375	0.50	0.625	0.75	1.00	1.25	1.50	1.75	2.00	FAN EFF. GRADE
						CFM SONE												
080AE	1/6	080A	1/8	860	0.01	323 4.2	247 3.4											N/A
			1/8	1160	0.03	436 7.4	382 6.3	321 6.1	232 5.5									
			1/8	1650	0.10	620 10.4	583 10.4	545 8.7	505 8.0	459 8.6	403 8.3	335 7.3						
		---	---	1750	0.12	658 10.9	623 10.9	587 9.5	550 8.8	510 9.0	461 9.1	405 8.0						
090AE	1/4	090A	1/8	860	0.02	495 5.9	390 4.4											N/A
			1/8	1160	0.05	668 9.8	592 8.2	510 7.9	401 6.4									
			1/8	1650	0.14	950 13.0	897 13.0	843 11.2	789 10.3	729 11.1	660 10.7	578 8.5						
		---	---	1750	0.17	1008 13.7	958 13.7	907 12.3	856 11.3	803 11.4	742 11.8	673 10.9						
100AE	1/2	100A	1/8	860	0.04	787 7.8	666 6.0	520 6.2										N/A
			1/8	1160	0.11	1061 13.3	973 12.1	882 10.0	780 10.9	651 9.0								
			1/3	1750	0.36	1601 17.8	1543 17.8	1484 17.6	1424 15.9	1365 14.7	1303 14.8	1236 15.6	1083 14.9	877 11.7				
120AE	3/4	120A	1/8	860	0.07	1047 5.8	951 5.3	830 5.1	586 4.3									N/A
			1/4	1160	0.18	1413 9.3	1344 9.3	1268 8.1	1183 7.7	1079 8.3	923 6.9							
			3/4	1750	0.63	2132 17.9	2087 17.9	2041 17.9	1993 17.7	1942 16.5	1889 15.5	1834 14.8	1709 15.6	1551 16.1	1288 14.2			
135ANE	3/4	135AN	1/8	860	0.08	1041 6.9	941 6.2	819 5.5	670 5.2									N/A
			1/4	1160	0.20	1404 11.4	1332 11.4	1254 9.6	1165 8.4	1070 9.1	962 9.1	823 7.9						
			3/4	1750	0.69	2118 17.8	2071 17.8	2024 17.8	1974 17.8	1922 16.9	1867 15.7	1808 15.4	1685 15.9	1554 16.6	1401 14.8	1203 14.6	899 14.6	
Outlet Area: 3.22 ft²																		
135AE	1, 2	135A	1/4	860	0.13	1437 7.1	1331 6.7	1208 5.9	1041 6.1									FEG56
			1/2	1160	0.31	1938 11.2	1862 11.2	1780 10.7	1691 9.4	1591 9.4	1471 10.0	1306 8.9						
			1*	1750	1.07	2924 22	2875 22	2824 22	2771 22	2717 21	2660 20	2601 19.0	2476 18.3	2334 19.4	2161 19.6	1918 17.5		
Outlet Area: 3.90 ft²																		
150ANE	1, 2	150AN	1/4	860	0.13	1385 8.2	1277 7.9	1150 6.3	1005 6.9	810 5.9								FEG53
			1/2	1160	0.32	1868 13.7	1790 13.7	1707 12.1	1615 10.5	1513 10.1	1407 11.0	1288 11.0	940 9.5					
			1*	1750	1.11	2818 21	2767 21	2715 21	2662 21	2606 20	2549 19.6	2488 18.6	2359 18.0	2221 19.2	2077 19.7	1913 18.5	1713 17.2	
Outlet Area: 3.90 ft²																		
150AE	1	150A	1/4	860	0.20	1913 8.5	1798 8.5	1668 7.1	1513 7.5	1286 6.7								FEG56
			1/2	1160	0.50	2580 13.5	2497 13.5	2409 13.3	2315 11.9	2213 11.3	2099 11.4	1965 12.1	1514 10.0					
	1		1 1/2*	1200	0.55	2669 20	2589 20	2504 20	2414 20	2317 19.3	2212 18.2	2091 17.5	1742 17.2	18.3	17.0			
	2			1750	1.72	3892 26	3838 26	3783 26	3726 26	3667 26	3607 25	3545 24	3414 22	3273 22	3116 22	2931 23	2699 22	
Outlet Area: 4.83 ft²																		
165ANE	1**	165AN	1/4	860	0.23	2094 7.7	1953 7.6	1805 6.9	1647 7.2	1472 7.3	1248 7.2							FEG60
			1/2	1160	0.56	2825 12.4	2721 12.4	2615 12.0	2506 11.4	2394 11.0	2277 11.2	2155 12.0	1877 11.2	1457 11.3				
	2		2*	1750	1.93	4261 22	4193 22	4124 22	4054 22	3984 21	3912 21	3840 21	3694 20	3543 20	3386 21	3223 22	3048 23	
Outlet Area: 4.83 ft²																		
165AE	1	165A	1/2	860	0.33	2898 10.1	2683 9.9	2499 8.9	2323 9.2	2069 9.4	1773 8.2							FEG60
			1	1160	0.81	3909 16.5	3744 16.5	3592 15.6	3452 14.7	3327 14.2	3199 14.8	3044 15.7	2640 13.7	2152 13.5				
	2		3*	1500	1.76	5055 24	4925 24	4802 24	4684 23	4571 22	4465 21	4368 21	4174 21	3941 22	3637 22	3310 19.2	2935 19.8	
	---			1750	2.8	5898 30	5786 30	5678 30	5574 30	5473 29	5375 28	5281 27	5109 26	4945 26	4769 27	4552 28	4289 27	

* Designates motors that cannot be used with speed controller.
EC Motor is an Electronically Commutated Motor.
PSC Motor is a Permanent Split Capacitor Motor.

** Performance available with 1 HP 1160 RPM ECODP motors or 1 HP 1750 RPM ECTEFC motors. 1160 RPM maximum.

NOTES:
1. Performance certified is for Installation Type B: Free inlet, ducted outlet.
2. Performance ratings do not include the effects of appurtenances (accessories).
3. The sound ratings shown are loudness values in fan sones at 1.5m (5 ft.) in a hemispherical free field calculated per AMCA International Standard 301.
4. Values shown are for Installation Type B: free inlet hemispherical sone levels.

BSI 080A

Outlet Area = 1.17 ft² **Fan Efficiency Grade: FEG50**

HP	RPM	STATIC PRESSURE (INCHES W.G.)																							
		0.125		0.25		0.50		0.75		1.00		1.25		1.50		1.75		2.00		2.25		2.50		3.00	
		CFM		CFM		CFM		CFM		CFM		CFM		CFM		CFM		CFM		CFM		CFM		CFM	
		BHP	Sone	BHP	Sone	BHP	Sone	BHP	Sone	BHP	Sone	BHP	Sone	BHP	Sone	BHP	Sone	BHP	Sone	BHP	Sone	BHP	Sone	BHP	Sone
1/4	850	241																							
		0.01	3.1																						
	1050	333		261																					
		0.03	4.6	0.03	4.7																				
	1250	419		363																					
		0.04	6.6	0.04	5.9																				
	1450	502		455		349																			
		0.06	9.0	0.07	7.3	0.07	7.5																		
	1650	584		542		457		344																	
		0.09	11.0	0.10	9.1	0.10	9.2	0.10	7.8																
	1850	664		627		552		470		352															
		0.13	11.8	0.14	11.0	0.14	9.9	0.14	10.7	0.13	9.1														
	2050	744		710		643		574		493		376													
		0.18	13.9	0.18	12.8	0.19	11.2	0.19	12.2	0.19	11.7	0.18	10.6												
	2250	823		792		730		669		604		525		416											
		0.24	15.6	0.24	15.1	0.25	13.0	0.26	13.0	0.26	14.2	0.26	13.2	0.24	12.3										
1/3	2375	872		843		784		726		667		599		516		390									
		0.28	16.8	0.28	16.8	0.29	14.3	0.30	13.8	0.30	14.8	0.30	15.2	0.30	13.0	0.27	13.3								
	2500	921		893		837		783		727		667		597		509									
		0.32	18.3	0.33	18.3	0.34	16.0	0.35	15.1	0.35	15.6	0.35	16.5	0.35	15.8	0.34	14.3								
1/2	2660	984		957		904		853		801		748		689		620		534							
		0.39	20	0.39	20	0.40	18.4	0.41	16.7	0.42	16.4	0.43	18.1	0.43	18.3	0.42	16.8	0.41	16.0						
	2860	1062		1037		988		940		892		843		793		737		673		597					
		0.48	23	0.49	23	0.50	21	0.51	19.6	0.52	18.6	0.53	19.1	0.53	20	0.53	21	0.52	19.1	0.51	17.5				
3/4	3060	1139		1116		1070		1025		980		935		889		842		789		730		576			
		0.59	26	0.59	26	0.61	25	0.62	23	0.63	21	0.64	21	0.65	21	0.65	22	0.65	23	0.64	21	0.61	19.4		
	3260	1217		1195		1152		1109		1067		1025		982		939		894		845		729		559	
		0.71	29	0.72	29	0.73	29	0.74	25	0.76	24	0.77	23	0.77	23	0.78	24	0.79	25	0.79	25	0.77	22	0.72	22
1	3425	1281		1260		1218		1177		1137		1097		1057		1016		975		932		833		708	
		0.82	33	0.83	33	0.84	32	0.86	29	0.87	26	0.88	25	0.89	24	0.90	25	0.91	26	0.91	27	0.91	26	0.87	23
	3590	1344		1324		1285		1246		1207		1169		1131		1092		1053		1013		926		823	
		0.94	35	0.95	35	0.97	35	0.98	33	1.00	30	1.01	28	1.02	27	1.03	27	1.03	27	1.05	29	1.05	29	1.03	26

MAXIMUM MOTOR FRAME SIZE: 145T

NOTES:
1. Performance certified is for Installation Type B: Free inlet, ducted outlet.
2. Power rating (BHP) does not include transmission losses.
3. Performance ratings do not include the effects of appurtenances (accessories).
4. The sound ratings shown are loudness values in fan sones at 1.5m (5 ft.) in a hemispherical free field calculated per AMCA International Standard 301.
5. Values shown are for installation Type B: free inlet hemispherical sone levels.

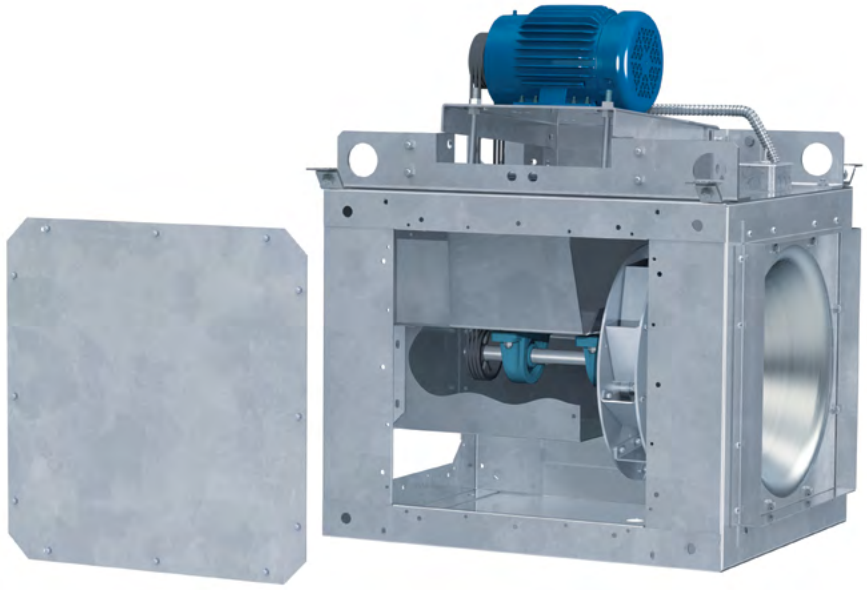

TCF
TWIN CITY FAN

BSI 090A

Outlet Area = 1.62 ft² **Fan Efficiency Grade: FEG60**

HP	RPM	STATIC PRESSURE (INCHES W.G.)																							
		0.125		0.25		0.50		0.75		1.00		1.25		1.50		1.75		2.00		2.25		2.75		3.25	
		CFM		CFM		CFM		CFM		CFM		CFM		CFM		CFM		CFM		CFM		CFM		CFM	
		BHP	Sone	BHP	Sone	BHP	Sone	BHP	Sone	BHP	Sone	BHP	Sone	BHP	Sone	BHP	Sone	BHP	Sone	BHP	Sone	BHP	Sone	BHP	Sone
1/4	1450	752		697		562																			
		0.09	9.0	0.09	8.2	0.10	8.8																		
	1650	869		822		715		576																	
		0.13	11.1	0.13	10.6	0.14	10.1	0.14	10.9																
	1850	984		944		854		748		608															
		0.18	13.2	0.18	13.3	0.19	12.0	0.20	12.8	0.20	12.4														
	2015	1079		1042		962		872		764		616													
		0.23	14.8	0.23	14.8	0.25	13.5	0.26	13.1	0.26	14.4	0.25	12.7												
1/3	2120	1139		1104		1029		946		851		734		505											
		0.27	15.8	0.27	15.8	0.28	14.4	0.30	13.9	0.30	14.8	0.30	14.8	0.27	13.2										
	2230	1201		1168		1099		1022		935		835		703											
		0.31	16.8	0.31	16.8	0.33	15.9	0.34	14.7	0.35	15.5	0.35	16.2	0.35	14.1										
1/2	2390	1292		1262		1197		1128		1052		967		868		736									
		0.38	17.9	0.38	17.9	0.40	17.6	0.41	16.3	0.43	16.3	0.43	17.3	0.44	17.3	0.42	14.4								
	2550	1382		1354		1295		1231		1163		1088		1004		908		781							
		0.46	19.8	0.47	19.8	0.48	19.6	0.49	18.7	0.51	17.9	0.52	18.4	0.53	19.4	0.53	18.6	0.51	16.0						
3/4	2735	1487		1460		1406		1348		1286		1220		1149		1069		979		866		646			
		0.56	22	0.57	22	0.59	22	0.60	21	0.62	20	0.63	20	0.65	21	0.65	22	0.65	21	0.64	18.4	0.58	17.3		
	2920	1591		1566		1515		1462		1406		1347		1283		1215		1140		1056		956			
		0.69	25	0.69	25	0.71	25	0.73	24	0.74	23	0.76	22	0.78	22	0.79	24	0.79	24	0.79	23	0.78	21		
1	3060	1669		1646		1598		1547		1495		1440		1381		1319		1251		1178		1097		863	
		0.79	26	0.80	26	0.81	26	0.83	26	0.85	25	0.87	24	0.88	24	0.90	24	0.91	25	0.91	26	0.91	25	0.87	21
	3205	1750		1728		1682		1635		1585		1534		1480		1422		1361		1296		1224		1055	
		0.90	28	0.91	28	0.93	28	0.95	28	0.97	27	0.99	26	1.01	26	1.02	26	1.04	27	1.05	28	1.05	28	1.04	24

MAXIMUM MOTOR FRAME SIZE: 145T

BSI 100A

Outlet Area = 2.20 ft² **Fan Efficiency Grade: FEG56**

HP	RPM	STATIC PRESSURE (INCHES W.G.)																							
		0.13		0.25		0.38		0.50		0.75		1.00		1.25		1.50		1.75		2.00		2.25		2.50	
		CFM		CFM		CFM		CFM		CFM		CFM		CFM		CFM		CFM		CFM		CFM		CFM	
		BHP	Sone	BHP	Sone	BHP	Sone	BHP	Sone	BHP	Sone	BHP	Sone	BHP	Sone	BHP	Sone	BHP	Sone	BHP	Sone	BHP	Sone	BHP	Sone
1/4	1025	816		716		592																			
		0.07	6.8	0.07	6.2	0.07	6.9																		
	1275	1053		981		899		806																	
		0.13	9.9	0.13	9.1	0.14	8.7	0.14	9.5																
	1465	1229		1169		1103		1030		859															
		0.19	12.3	0.20	12.1	0.20	11.2	0.21	10.8	0.22	12.1														
	1565	1321		1265		1205		1140		992		790													
		0.23	13.7	0.24	13.7	0.25	12.8	0.25	12.2	0.26	13.1	0.26	12.7												
1/3	1645	1394		1341		1285		1225		1090		924													
		0.27	15.0	0.28	14.5	0.28	13.9	0.29	13.2	0.30	13.9	0.31	14.3												
	1725	1467		1417		1364		1308		1184		1038		833											
		0.31	16.0	0.32	16.0	0.33	15.4	0.33	14.5	0.35	14.4	0.35	15.6	0.34	14.4										
1/2	1850	1580		1534		1485		1434		1324		1199		1049		818									
		0.38	17.9	0.39	17.9	0.40	17.1	0.41	16.3	0.42	15.5	0.43	16.7	0.44	17.5	0.41	16.1								
	1980	1697		1654		1610		1563		1463		1353		1229		1077		825							
		0.47	19.2	0.47	19.2	0.48	19.0	0.49	18.3	0.51	17.2	0.53	17.3	0.53	18.8	0.53	18.1	0.5	16.8						
3/4	2120	1823		1783		1742		1699		1609		1510		1403		1281		1133		894					
		0.57	21	0.58	21	0.59	20	0.60	20	0.62	19.2	0.64	18.6	0.65	19.5	0.66	20	0.65	19.1	0.61	17.9				
	2255	1944		1906		1868		1829		1746		1656		1560		1455		1366		1192		970			
		0.68	22	0.69	22	0.70	22	0.71	22	0.74	21	0.76	19.9	0.77	19.9	0.79	21	0.79	21	0.78	19.9	0.74	18.1		
1	2370	2046		2011		1975		1938		1860		1777		1689		1593		1489		1371		1226		999	
		0.79	24	0.80	24	0.81	24	0.83	24	0.85	23	0.87	22	0.89	22	0.91	22	0.92	23	0.92	22	0.91	20	0.85	19.3
	2480	2145		2111		2077		2041		1968		1891		1808		1720		1626		1522		1405		1259	
		0.91	25	0.92	25	0.93	25	0.94	25	0.96	24	0.99	23	1.01	23	1.03	23	1.04	24	1.05	25	1.05	24	1.03	21

MAXIMUM MOTOR FRAME SIZE: 145T

NOTES:
1. Performance certified is for Installation Type B: Free inlet, ducted outlet.
2. Power rating (BHP) does not include transmission losses.
3. Performance ratings do not include the effects of appurtenances (accessories).
4. The sound ratings shown are loudness values in fan sones at 1.5m (5 ft.) in a hemispherical free field calculated per AMCA International Standard 301.
5. Values shown are for installation type B: free inlet hemispherical sone levels.

BSI 120A

Outlet Area = 2.67 ft² **Fan Efficiency Grade: FEG56**

HP	RPM	STATIC PRESSURE (INCHES W.G.)																							
		0.125		0.25		0.375		0.50		0.625		0.75		1.00		1.25		1.50		1.75		2.00		2.25	
		CFM		CFM		CFM		CFM		CFM		CFM		CFM		CFM		CFM		CFM		CFM		CFM	
		BHP	Sone	BHP	Sone	BHP	Sone	BHP	Sone	BHP	Sone	BHP	Sone	BHP	Sone	BHP	Sone	BHP	Sone	BHP	Sone	BHP	Sone	BHP	Sone
1/4	700	716		489																					
		0.04	3.5	0.04	3.0																				
	900	990		880		710																			
		0.08	6.2	0.09	6.0	0.09	5.7																		
	1100	1252		1166		1074		944		748															
		0.15	9.2	0.16	7.9	0.16	8.0	0.16	8.5	0.15	6.8														
	1290	1495		1423		1349		1271		1169		1041													
		0.24	11.6	0.25	10.9	0.25	10.0	0.26	10.1	0.26	10.8	0.26	10.3												
1/3	1355	1578		1509		1439		1367		1282		1172													
		0.27	12.5	0.28	11.9	0.29	10.9	0.30	10.7	0.30	11.3	0.30	11.6												
	1420	1660		1595		1528		1461		1387		1293		1040											
		0.31	13.6	0.32	13.0	0.33	11.8	0.34	11.6	0.35	11.7	0.35	12.4	0.34	10.5										
1/2	1525	1792		1732		1670		1607		1543		1471		1275											
		0.39	14.9	0.40	14.9	0.41	13.9	0.42	13.1	0.43	12.8	0.43	13.4	0.43	13.6										
	1630	1923		1867		1810		1751		1693		1631		1476		1267									
		0.47	16.7	0.48	16.7	0.49	15.8	0.50	14.5	0.51	14.3	0.52	14.3	0.53	15.2	0.52	13.9								
3/4	1750	2072		2020		1968		1913		1859		1804		1681		1514		1302							
		0.58	18.6	0.59	18.6	0.61	17.7	0.62	16.8	0.63	15.8	0.64	15.6	0.65	16.4	0.65	16.6	0.64	14.6						
	1865	2215		2166		2117		2067		2016		1965		1858		1726		1556		1337					
		0.70	21	0.71	21	0.73	20	0.74	19.4	0.75	18.3	0.76	17.6	0.78	17.6	0.79	18.7	0.79	18.3	0.77	15.3				
1	1955	2326		2280		2233		2186		2137		2089		1990		1877		1731		1557		1285			
		0.80	22	0.82	22	0.83	22	0.85	22	0.86	20	0.87	19.4	0.90	18.9	0.91	19.5	0.91	20	0.9	19.3	0.86	16.3		
	2045	2437		2393		2349		2304		2258		2211		2118		2017		1894		1741		1564			
		0.92	24	0.93	24	0.95	24	0.97	23	0.98	22	0.99	22	1.02	20	1.04	21	1.05	22	1.04	22	1.03	19.4		
1 1/2	2195	2622		2582		2540		2498		2456		2413		2326		2238		2140		2022		1879		1718	
		1.13	26	1.15	26	1.17	26	1.18	26	1.20	25	1.22	25	1.24	23	1.27	22	1.29	23	1.29	24	1.29	24	1.28	22
	2345	2807		2769		2730		2691		2652		2612		2531		2450		2365		2271		2159		2026	
		1.38	30	1.40	30	1.42	30	1.43	30	1.45	29	1.47	28	1.50	26	1.53	25	1.55	25	1.57	25	1.58	27	1.57	27

MAXIMUM MOTOR FRAME SIZE: 145T

BSI 120AHP

Outlet Area = 2.67 ft² **Fan Efficiency Grade: FEG53**

HP	RPM	STATIC PRESSURE (INCHES W.G.)																							
		0.75		1.00		1.25		1.50		1.75		2.00		2.25		2.50		2.75		3.00		3.25		3.50	
		CFM		CFM		CFM		CFM		CFM		CFM		CFM		CFM		CFM		CFM		CFM		CFM	
		BHP	Sone	BHP	Sone	BHP	Sone	BHP	Sone	BHP	Sone	BHP	Sone	BHP	Sone	BHP	Sone	BHP	Sone	BHP	Sone	BHP	Sone	BHP	Sone
1/2	1240	586																							
		0.15	7.6																						
	1450	921		720																					
		0.26	10.7	0.24	9.6																				
1/3	1525	1020		855																					
		0.30	11.3	0.30	10.9																				
	1600	1112		963		754																			
		0.34	11.8	0.35	12.2	0.32	10.8																		
1/2	1720	1249		1125		978																			
		0.42	13.1	0.43	13.6	0.43	13.1																		
	1840	1378		1275		1146		1004																	
		0.51	14.4	0.52	14.4	0.53	15.3	0.52	14.2																
3/4	1970	1513		1424		1318		1193		1055															
		0.62	16.9	0.63	16.0	0.64	16.4	0.64	16.6	0.63	15.2														
	2105	1650		1571		1482		1375		1257		1126													
		0.75	19.3	0.77	18.0	0.78	17.5	0.79	18.4	0.79	18.2	0.77	17.0												
1	2210	1755		1681		1601		1509		1401		1287		1153											
		0.86	21	0.88	20	0.90	19.0	0.91	19.2	0.91	20	0.91	19.8	0.88	17.8										
	2315	1858		1788		1715		1634		1539		1433		1323		1187									
		0.98	24	1.00	21	1.02	20	1.04	20	1.05	21	1.05	21	1.04	21	1.01	18.9								
1 1/2	2485	2024		1960		1894		1824		1747		1658		1560		1459		1348		1184					
		1.21	27	1.23	25	1.25	24	1.27	23	1.28	23	1.29	23	1.30	24	1.29	24	1.28	22	1.19	21				
	2655	2187		2128		2067		2005		1938		1866		1784		1692		1598		1501		1384		1206	
		1.46	30	1.49	29	1.51	27	1.53	26	1.55	25	1.56	25	1.58	26	1.58	26	1.58	26	1.57	25	1.53	23	1.4	23

MAXIMUM MOTOR FRAME SIZE: 145T

NOTES:
1. Performance certified is for Installation Type B: Free inlet, ducted outlet.
2. Power rating (BHP) does not include transmission losses.
3. Performance ratings do not include the effects of appurtenances (accessories).
4. The sound ratings shown are loudness values in fan sones at 1.5m (5 ft.) in a hemispherical free field calculated per AMCA International Standard 301.
5. Values shown are for installation type B: free inlet hemispherical sone levels.

BSI 135A

Outlet Area = 3.22 ft² **Fan Efficiency Grade: FEG53**

HP	RPM	STATIC PRESSURE (INCHES W.G.)																							
		0.125		0.25		0.375		0.50		0.625		0.75		1.00		1.25		1.50		1.75		2.00		2.25	
		CFM		CFM		CFM		CFM		CFM		CFM		CFM		CFM		CFM		CFM		CFM		CFM	
		BHP	Sone	BHP	Sone	BHP	Sone	BHP	Sone	BHP	Sone	BHP	Sone	BHP	Sone	BHP	Sone	BHP	Sone	BHP	Sone	BHP	Sone	BHP	Sone
1/4	900	1386		1268		1120		894																	
		0.14	8.0	0.15	7.1	0.15	7.7	0.15	6.1																
	1075	1696		1599		1500		1380		1217															
		0.23	11.0	0.24	9.8	0.25	9.4	0.26	10.0	0.26	9.8														
1/3	1130	1792		1700		1607		1503		1365		1192													
		0.27	11.8	0.28	10.8	0.29	10.1	0.30	10.3	0.30	10.9	0.29	9.6												
	1190	1897		1810		1721		1629		1515		1367													
		0.31	12.6	0.33	12.0	0.34	10.9	0.34	10.9	0.35	11.7	0.35	11.4												
1/2	1280	2053		1973		1890		1807		1716		1602		1292											
		0.39	13.9	0.40	13.4	0.41	12.4	0.42	12.0	0.43	12.2	0.43	13.0	0.42	10.8										
	1370	2208		2133		2057		1980		1901		1811		1568											
		0.47	15.4	0.49	15.4	0.50	14.4	0.51	13.3	0.52	13.2	0.53	14.0	0.53	14.1										
3/4	1465	2370		2301		2231		2158		2086		2010		1818		1559									
		0.58	17.0	0.59	17.0	0.61	16.0	0.62	15.0	0.63	14.8	0.64	14.8	0.65	15.8	0.64	14.3								
	1565	2541		2477		2411		2344		2277		2208		2054		1843		1572							
		0.70	19.0	0.72	19.0	0.73	18.3	0.75	17.2	0.76	16.5	0.77	16.2	0.79	17.2	0.79	17.3	0.77	14.8						
1	1640	2669		2608		2545		2482		2417		2353		2215		2038		1813							
		0.81	20	0.82	20	0.84	20	0.86	19.1	0.87	18.1	0.88	17.4	0.91	17.6	0.91	18.9	0.9	17.7						
	1720	2805		2747		2687		2627		2566		2504		2378		2229		2034		1801					
		0.93	22	0.95	22	0.96	22	0.98	21	1.00	19.8	1.01	19.1	1.04	18.6	1.05	19.7	1.05	19.9	1.04	18.1				
1 1/2	1845	3017		2963		2908		2852		2795		2738		2623		2500		2350		2163		1946			
		1.14	25	1.16	25	1.18	25	1.20	24	1.22	23	1.23	22	1.27	21	1.29	21	1.30	22	1.29	22	1.28	21		
	1970	3228		3178		3127		3075		3022		2969		2862		2752		2632		2484		2305		2105	
		1.39	27	1.41	27	1.43	27	1.45	27	1.47	26	1.49	25	1.52	24	1.55	23	1.58	24	1.58	25	1.58	24	1.56	23

MAXIMUM MOTOR FRAME SIZE: 145T

BSI 135AHP

Outlet Area = 3.22 ft² **Fan Efficiency Grade: FEG53**

HP	RPM	STATIC PRESSURE (INCHES W.G.)																							
		0.25		0.50		0.75		1.00		1.25		1.50		1.75		2.00		2.25		2.50		2.75		3.00	
		CFM		CFM		CFM		CFM		CFM		CFM		CFM		CFM		CFM		CFM		CFM		CFM	
		BHP	Sone	BHP	Sone	BHP	Sone	BHP	Sone	BHP	Sone	BHP	Sone	BHP	Sone	BHP	Sone	BHP	Sone	BHP	Sone	BHP	Sone	BHP	Sone
1/4	1050	1116		899																					
		0.16	8.5	0.17	8.1																				
	1200	1321		1161		937																			
		0.23	11.4	0.24	9.3	0.25	9.5																		
1/3	1275	1421		1276		1081		789																	
		0.28	12.6	0.29	10.1	0.30	10.8	0.26	9.7																
	1350	1520		1387		1219		1007																	
		0.33	14.0	0.34	11.5	0.35	11.7	0.35	11.0																
1/2	1450	1651		1529		1390		1206		966															
		0.40	15.5	0.42	13.2	0.43	12.4	0.44	13.0	0.41	11.6														
	1550	1780		1668		1546		1392		1212															
		0.49	17.2	0.51	15.0	0.52	13.6	0.53	14.4	0.53	13.9														
3/4	1655	1915		1812		1701		1573		1412		1237													
		0.59	19.0	0.61	17.4	0.63	15.2	0.64	15.2	0.65	16.0	0.64	14.6												
	1765	2055		1959		1858		1747		1613		1457		1283											
		0.71	21	0.74	19.7	0.76	17.6	0.77	16.2	0.78	17.1	0.79	17.2	0.77	15.5										
1	1855	2169		2079		1983		1882		1767		1625		1475		1286									
		0.82	22	0.85	21	0.87	19.1	0.89	18.0	0.91	17.6	0.91	18.4	0.91	18.2	0.87	16.4								
	1945	2282		2197		2107		2013		1910		1788		1646		1501		1294							
		0.94	24	0.97	23	1.00	21	1.02	19.4	1.04	18.6	1.05	19.5	1.05	19.9	1.04	19.3	0.98	17.8						
1 1/2	2085	2458		2379		2297		2211		2121		2021		1903		1771		1637		1470					
		1.16	26	1.19	26	1.22	24	1.24	22	1.26	21	1.28	21	1.29	22	1.30	22	1.29	22	1.25	19.7				
	2225	2633		2560		2484		2405		2323		2236		2139		2027		1903		1779		1639		1423	
		1.40	29	1.44	29	1.47	27	1.50	26	1.52	24	1.54	23	1.56	23	1.57	24	1.57	24	1.57	24	1.55	23	1.43	22

MAXIMUM MOTOR FRAME SIZE: 145T

NOTES:
1. Performance certified is for Installation Type B: Free inlet, ducted outlet.
2. Power rating (BHP) does not include transmission losses.
3. Performance ratings do not include the effects of appurtenances (accessories).
4. The sound ratings shown are loudness values in fan sones at 1.5m (5 ft.) in a hemispherical free field calculated per AMCA International Standard 301.
5. Values shown are for installation type B: free inlet hemispherical sone levels.

BSI 150A

Outlet Area = 3.90 ft² **Fan Efficiency Grade: FEG53**

HP	RPM	STATIC PRESSURE (INCHES W.G.)																							
		0.125		0.25		0.375		0.50		0.625		0.75		1.00		1.25		1.50		1.75		2.00		2.25	
		CFM		CFM		CFM		CFM		CFM		CFM		CFM		CFM		CFM		CFM		CFM		CFM	
		BHP	Sone	BHP	Sone	BHP	Sone	BHP	Sone	BHP	Sone	BHP	Sone	BHP	Sone	BHP	Sone	BHP	Sone	BHP	Sone	BHP	Sone	BHP	Sone
1/4	825	1693		1552		1378		1115																	
		0.17	8.2	0.18	7.3	0.19	7.9	0.18	6.6																
	920	1918		1793		1660		1481		1235															
		0.24	10.2	0.25	9.1	0.26	8.7	0.26	9.5	0.25	7.7														
1/3	970	2035		1917		1795		1646		1444															
		0.28	10.9	0.29	9.9	0.30	9.3	0.30	10.1	0.30	9.8														
	1020	2152		2040		1925		1798		1626		1410													
		0.32	11.7	0.33	11.1	0.34	10.1	0.35	10.7	0.35	10.9	0.35	9.8												
1/2	1095	2326		2222		2116		2006		1874		1701													
		0.39	13.2	0.41	12.6	0.42	11.5	0.43	11.4	0.44	12.3	0.44	12.4												
	1170	2498		2402		2303		2203		2094		1959		1593											
		0.48	14.6	0.49	14.2	0.51	13.0	0.52	12.5	0.53	12.9	0.53	13.4	0.52	11.7										
3/4	1250	2682		2592		2500		2407		2311		2204		1913											
		0.58	16.2	0.60	15.8	0.61	14.8	0.63	14.0	0.64	13.6	0.65	14.3	0.65	14.7										
	1335	2876		2792		2707		2620		2532		2440		2209		1898									
		0.70	18.0	0.72	18.0	0.74	17.1	0.76	15.8	0.77	15.3	0.78	15.3	0.79	16.7	0.78	15.1								
1	1400	3024		2944		2863		2780		2697		2613		2416		2147		1771							
		0.81	18.8	0.83	18.8	0.85	18.5	0.87	17.5	0.88	16.8	0.90	16.1	0.91	17.3	0.91	17.3	0.88	14.4						
	1465	3171		3096		3019		2940		2860		2781		2607		2377		2090							
		0.93	20	0.95	20	0.97	20	0.99	19.0	1.00	18.1	1.02	17.7	1.04	17.7	1.05	18.9	1.03	17.2						
1½	1570	3409		3339		3267		3195		3120		3046		2894		2715		2483		2206					
		1.14	23	1.16	23	1.18	23	1.20	22	1.22	20	1.24	19.8	1.27	19.4	1.29	21	1.29	21	1.27	18.9				
	1680	3657		3592		3525		3458		3389		3320		3181		3032		2851		2625		2365			
		1.39	25	1.41	25	1.44	25	1.46	25	1.48	24	1.50	22	1.54	21	1.57	21	1.58	23	1.57	23	1.56	21		
2	1760	3837		3775		3712		3648		3583		3517		3385		3248		3094		2903		2676		2412	
		1.59	27	1.62	27	1.64	27	1.67	27	1.69	25	1.71	24	1.75	23	1.79	23	1.81	24	1.82	25	1.81	24	1.78	21
	1845	4028		3969		3909		3848		3787		3724		3598		3471		3334		3174		2979		2758	
		1.83	29	1.86	29	1.89	29	1.91	29	1.94	28	1.96	27	2.00	25	2.04	25	2.08	25	2.09	26	2.09	27	2.08	26

MAXIMUM MOTOR FRAME SIZE: 184T

BSI 150AHP

Outlet Area = 3.90 ft² **Fan Efficiency Grade: FEG53**

HP	RPM	STATIC PRESSURE (INCHES W.G.)																							
		0.50		0.75		1.00		1.25		1.50		1.75		2.00		2.25		2.50		2.75		3.00		3.25	
		CFM		CFM		CFM		CFM		CFM		CFM		CFM		CFM		CFM		CFM		CFM		CFM	
		BHP	Sone	BHP	Sone	BHP	Sone	BHP	Sone	BHP	Sone	BHP	Sone	BHP	Sone	BHP	Sone	BHP	Sone	BHP	Sone	BHP	Sone	BHP	Sone
1/3	950	1078																							
		0.20	8.3																						
	1140	1505		1261																					
		0.34	10.4	0.34	10.8																				
1/2	1230	1682		1481		1226																			
		0.42	11.9	0.43	12.0	0.42	11.5																		
	1320	1853		1684		1465		1175																	
		0.51	13.6	0.52	12.8	0.53	13.6	0.49	11.9																
3/4	1415	2029		1881		1698		1482																	
		0.62	15.9	0.64	14.4	0.65	14.8	0.65	14.5																
	1510	2201		2067		1914		1723		1512															
		0.75	17.8	0.77	16.1	0.79	15.5	0.79	16.5	0.78	15.6														
1	1585	2335		2210		2073		1906		1714		1484													
		0.86	19.6	0.88	17.9	0.90	16.9	0.92	17.5	0.92	17.6	0.88	15.6												
	1660	2468		2350		2224		2078		1902		1715		1444											
		0.98	21	1.01	19.0	1.03	18.0	1.05	18.1	1.05	19.0	1.05	17.8	0.97	16.6										
1½	1780	2679		2570		2457		2333		2189		2023		1848		1615									
		1.20	24	1.23	22	1.26	20	1.28	19.4	1.29	20	1.30	21	1.29	19.9	1.23	18.4								
	1900	2887		2787		2682		2573		2453		2313		2155		1992		1794							
		1.45	27	1.48	25	1.51	23	1.54	22	1.56	22	1.58	22	1.58	23	1.57	22	1.53	20						
2	1995	3050		2956		2858		2756		2648		2527		2387		2235		2079		1889					
		1.67	29	1.71	27	1.74	26	1.77	24	1.79	23	1.81	23	1.83	25	1.83	25	1.82	24	1.77	22				
	2090	3213		3123		3031		2935		2835		2728		2607		2469		2324		2175		1995		1721	
		1.91	31	1.95	29	1.99	28	2.02	26	2.05	25	2.07	25	2.09	25	2.10	26	2.10	26	2.09	26	2.04	24	1.86	24

MAXIMUM MOTOR FRAME SIZE: 184T

NOTES:
1. Performance certified is for Installation Type B: Free inlet, ducted outlet.
2. Power rating (BHP) does not include transmission losses.
3. Performance ratings do not include the effects of appurtenances (accessories).
4. The sound ratings shown are loudness values in fan sones at 1.5m (5 ft.) in a hemispherical free field calculated per AMCA International Standard 301.
5. Values shown are for installation type B: free inlet hemispherical sone levels.

BSI 165A

Outlet Area = 4.83 ft² **Fan Efficiency Grade: FEG56**

HP	RPM	STATIC PRESSURE (INCHES W.G.)																							
		0.125		0.25		0.375		0.50		0.625		0.75		1.00		1.25		1.50		1.75		2.00		2.25	
		CFM		CFM		CFM		CFM		CFM		CFM		CFM		CFM		CFM		CFM		CFM		CFM	
		BHP	Sone	BHP	Sone	BHP	Sone	BHP	Sone	BHP	Sone	BHP	Sone	BHP	Sone	BHP	Sone	BHP	Sone	BHP	Sone	BHP	Sone	BHP	Sone
1/3	810	2636		2420		2167		1919		1441															
		0.27	10.1	0.29	7.9	0.30	8	0.30	8.6	0.27	8.2														
	875	2876		2690		2450		2238		1965		1403													
		0.34	11.5	0.36	9.6	0.37	8.6	0.38	9.6	0.37	9.6	0.33	9.4												
1/2	940	3114		2948		2737		2522		2324		2029													
		0.42	13.1	0.44	11.4	0.45	9.7	0.46	10.2	0.47	11	0.46	10.5												
	1000	3332		3180		2998		2783		2598		2394													
		0.51	14.2	0.52	13.1	0.54	11.5	0.55	10.8	0.56	11.7	0.56	11.9												
3/4	1075	3602		3464		3308		3115		2924		2756		2269											
		0.63	16.1	0.65	15.2	0.66	13.4	0.68	12.3	0.69	12.3	0.70	13.3	0.68	12.7										
	1145	3853		3726		3586		3420		3230		3062		2711		2031									
		0.76	17.5	0.77	17	0.79	15.6	0.81	14.1	0.82	13.4	0.83	14.1	0.84	14.7	0.77	13.8								
1	1205	4067		3948		3819		3672		3496		3322		3016		2559									
		0.88	18.6	0.90	18.6	0.92	17.1	0.94	15.8	0.95	14.5	0.96	14.5	0.98	15.9	0.96	14.5								
	1260	4263		4150		4029		3896		3737		3564		3265		2916		2290							
		1.00	19.8	1.02	19.7	1.04	18.9	1.06	17.3	1.08	16	1.10	15.3	1.12	16.7	1.12	16.4	1.04	15.2						
1 1/2	1355	4600		4497		4387		4269		4137		3984		3678		3408		3040		2406					
		1.24	22	1.27	22	1.29	21	1.31	20	1.33	18.9	1.35	17.9	1.38	17.9	1.40	19.2	1.38	18.1	1.28	16.9				
	1445	4919		4823		4722		4615		4500		4369		4071		3809		3545		3162		2529			
		1.51	24	1.53	24	1.55	24	1.58	23	1.60	22	1.62	20	1.66	19.2	1.68	20	1.69	21	1.66	18.9	1.54	18		
2	1520	5183		5093		4998		4898		4792		4678		4404		4134		3896		3616		3207		2508	
		1.75	26	1.77	26	1.80	26	1.82	25	1.85	24	1.87	23	1.91	21	1.94	21	1.97	23	1.97	23	1.92	19	1.74	18.8
	1590	5430		5344		5254		5161		5062		4957		4710		4439		4204		3970		3667		3234	
		2.00	28	2.03	28	2.05	28	2.08	27	2.10	26	2.13	25	2.17	23	2.21	22	2.24	23	2.26	24	2.24	23	2.17	20
3	1705	5834		5755		5673		5587		5498		5404		5197		4948		4702		4487		4269		3997	
		2.46	30	2.49	30	2.52	30	2.55	30	2.57	30	2.60	29	2.65	27	2.70	25	2.73	25	2.76	26	2.78	27	2.77	26
	1780	6098		6022		5944		5863		5778		5691		5502		5276		5032		4812		4609		4392	
		2.80	34	2.83	34	2.86	34	2.89	34	2.92	32	2.94	32	3.00	29	3.05	27	3.09	26	3.12	27	3.15	29	3.17	29

MAXIMUM MOTOR FRAME SIZE: 145T

BSI 165AHP

Outlet Area = 4.83 ft² **Fan Efficiency Grade: FEG56**

HP	RPM	STATIC PRESSURE (INCHES W.G.)																							
		0.75		1.00		1.25		1.50		1.75		2.00		2.25		2.50		2.75		3.00		3.25		3.50	
		CFM		CFM		CFM		CFM		CFM		CFM		CFM		CFM		CFM		CFM		CFM		CFM	
		BHP	Sone	BHP	Sone	BHP	Sone	BHP	Sone	BHP	Sone	BHP	Sone	BHP	Sone	BHP	Sone	BHP	Sone	BHP	Sone	BHP	Sone	BHP	Sone
1/2	1000	1620		1053																					
		0.37	9.2	0.33	8.2																				
	1130	2070		1776		1294																			
		0.53	10.6	0.53	10.6	0.49	9.7																		
3/4	1210	2322		2071		1764																			
		0.65	11.3	0.65	12.1	0.65	10.5																		
	1290	2564		2342		2088		1758																	
		0.78	12.3	0.79	12.8	0.79	12.7	0.78	11.5																
1	1350	2741		2535		2306		2039		1631															
		0.88	13.3	0.90	13.0	0.91	13.9	0.91	12.9	0.86	12.4														
	1415	2928		2736		2529		2294		2009		1498													
		1.01	14.4	1.03	13.8	1.04	14.2	1.05	14.5	1.04	13.0	0.93	13.0												
1 1/2	1520	3222		3051		2867		2669		2446		2182		1769											
		1.24	16.7	1.27	15.2	1.29	15.2	1.30	16.1	1.30	15.7	1.29	14.5	1.21	14.6										
	1620	3495		3341		3175		2998		2808		2597		2351		1995									
		1.48	18.9	1.52	17.0	1.54	16.2	1.56	16.8	1.57	17.2	1.57	17.2	1.56	15.7	1.49	15.7								
2	1700	3710		3567		3413		3250		3077		2890		2684		2443		2099							
		1.69	20	1.74	18.9	1.77	17.9	1.79	17.4	1.81	18.0	1.81	18.6	1.82	18.2	1.8	16.7	1.72	16.8						
	1785	3936		3803		3660		3509		3350		3182		3000		2802		2572		2254					
		1.94	23	1.99	21	2.03	19.3	2.06	18.9	2.09	18.9	2.10	19.3	2.10	19.6	2.10	19.0	2.09	17.9	2.01	18.0				
3	1920	4289		4169		4042		3907		3766		3618		3464		3299		3121		2928		2697		2382	
		2.39	26	2.45	24	2.50	23	2.54	21	2.57	20	2.59	20	2.61	21	2.61	22	2.62	22	2.62	20	2.59	19.7	2.49	19.7
	2040	4600		4489		4373		4250		4122		3988		3849		3704		3551		3388		3214		3020	
		2.84	28	2.91	27	2.97	25	3.01	24	3.05	23	3.08	22	3.11	22	3.13	23	3.13	24	3.14	24	3.14	23	3.13	22

MAXIMUM MOTOR FRAME SIZE: 145T

NOTES:
1. Performance certified is for Installation Type B: Free inlet, ducted outlet.
2. Power rating (BHP) does not include transmission losses.
3. Performance ratings do not include the effects of appurtenances (accessories).
4. The sound ratings shown are loudness values in fan sones at 1.5m (5 ft.) in a hemispherical free field calculated per AMCA International Standard 301.
5. Values shown are for installation type B: free inlet hemispherical sone levels.

BSI 180A

Outlet Area = 5.82 ft² **Fan Efficiency Grade: FEG56**

HP	RPM	STATIC PRESSURE (INCHES W.G.)																							
		0.125		0.25		0.375		0.50		0.625		0.75		1.00		1.25		1.50		1.75		2.00		2.25	
		CFM		CFM		CFM		CFM		CFM		CFM		CFM		CFM		CFM		CFM		CFM		CFM	
		BHP	Sone	BHP	Sone	BHP	Sone	BHP	Sone	BHP	Sone	BHP	Sone	BHP	Sone	BHP	Sone	BHP	Sone	BHP	Sone	BHP	Sone	BHP	Sone
1/3	675	2849		2536		2228		1733																	
		0.25	8.4	0.27	6.6	0.27	7.4	0.26	7.3																
	730	3121		2854		2550		2237		1565															
		0.32	10	0.33	7.9	0.34	8	0.34	8.6	0.30	8.2														
1/2	785	3389		3159		2864		2607		2243															
		0.39	11.4	0.41	9.5	0.42	8.6	0.43	9.5	0.42	9.5														
	840	3654		3449		3184		2928		2673		2267													
		0.48	13	0.50	11.2	0.51	9.6	0.52	10.2	0.53	10.9	0.51	10.6												
3/4	900	3941		3756		3529		3270		3048		2784													
		0.59	14.6	0.60	13.1	0.62	11.3	0.64	10.9	0.64	11.7	0.64	12												
	960	4227		4056		3861		3619		3393		3184		2512											
		0.71	16.1	0.73	15.1	0.75	13.3	0.76	12.2	0.78	12.4	0.78	13.4	0.75	13.2										
1	1010	4463		4304		4126		3909		3678		3479		2985											
		0.82	17.2	0.84	16.5	0.86	14.7	0.88	13.3	0.90	13.2	0.91	14.2	0.90	14.3										
	1055	4675		4525		4359		4164		3939		3736		3329		2586									
		0.93	18.3	0.96	17.8	0.98	16.4	1.00	14.8	1.02	14.1	1.03	14.3	1.04	15.4	0.97	14.7								
1½	1135	5051		4913		4764		4600		4403		4194		3835		3385		2510							
		1.16	20	1.18	19.9	1.21	18.9	1.23	17.3	1.25	15.9	1.27	15.8	1.29	17	1.29	17.1	1.16	16						
	1210	5401		5274		5138		4991		4824		4631		4267		3927		3418							
		1.40	22	1.43	22	1.45	21	1.48	20	1.50	18.4	1.52	17.4	1.55	18.1	1.57	19.1	1.54	17.5						
2	1275	5704		5585		5458		5322		5175		5004		4638		4323		3954		3378					
		1.64	24	1.66	24	1.69	24	1.72	22	1.74	21	1.77	19.5	1.81	18.9	1.83	20	1.83	21	1.76	18.3				
	1330	5960		5846		5726		5599		5463		5310		4956		4640		4331		3897		3210			
		1.85	25	1.88	25	1.91	25	1.94	24	1.97	23	1.99	21	2.04	19.6	2.07	21	2.09	22	2.06	21	1.94	19.5		
3	1430	6424		6319		6210		6095		5973		5844		5537		5211		4929		4636		4235		3654	
		2.30	28	2.33	28	2.36	28	2.39	27	2.42	26	2.45	25	2.50	23	2.55	22	2.58	24	2.60	24	2.57	23	2.46	21
	1525	6864		6767		6665		6560		6449		6333		6072		5763		5471		5211		4932		4560	
		2.79	30	2.82	30	2.85	30	2.88	30	2.92	29	2.95	29	3.01	26	3.06	25	3.10	25	3.13	26	3.15	27	3.12	25

MAXIMUM MOTOR FRAME SIZE: 184T

BSI 180AHP

Outlet Area = 5.82 ft² **Fan Efficiency Grade: FEG56**

HP	RPM	STATIC PRESSURE (INCHES W.G.)																							
		0.75		1.00		1.25		1.50		1.75		2.00		2.25		2.50		2.75		3.00		3.25		3.50	
		CFM		CFM		CFM		CFM		CFM		CFM		CFM		CFM		CFM		CFM		CFM		CFM	
		BHP	Sone	BHP	Sone	BHP	Sone	BHP	Sone	BHP	Sone	BHP	Sone	BHP	Sone	BHP	Sone	BHP	Sone	BHP	Sone	BHP	Sone	BHP	Sone
1/2	875	1753																							
		0.39	8.3																						
	970	2218		1785																					
		0.53	10.4	0.53	9.4																				
3/4	1040	2524		2179		1645																			
		0.65	11.2	0.66	11.3	0.62	10.5																		
	1105	2793		2492		2124																			
		0.78	11.8	0.79	12.6	0.78	11.0																		
1	1160	3013		2739		2422		1982																	
		0.89	12.7	0.91	13.4	0.91	13.0	0.88	11.9																
	1215	3227		2974		2691		2354		1778															
		1.02	13.6	1.04	13.6	1.05	14.4	1.04	12.7	0.96	12.7														
1½	1300	3549		3322		3075		2799		2468		1915													
		1.24	15.4	1.26	14.7	1.28	15.5	1.28	15.7	1.28	13.8	1.17	13.8												
	1390	3881		3676		3456		3219		2954		2640		2155											
		1.49	17.4	1.53	16.1	1.55	16.0	1.57	17.0	1.57	16.8	1.56	15.4	1.46	15.4										
2	1460	4133		3944		3740		3524		3288		3027		2710		2217									
		1.71	19.1	1.76	17.8	1.79	17.0	1.81	17.2	1.82	18.1	1.82	17.5	1.80	16.4	1.68	16.4								
	1530	4381		4206		4016		3816		3603		3371		3114		2797		2311							
		1.96	21	2.01	19.1	2.04	18.2	2.07	18.0	2.09	19.1	2.09	19.4	2.09	18.3	2.06	17.6	1.93	17.5						
3	1640	4766		4608		4438		4258		4070		3871		3657		3423		3157		2800		2202			
		2.38	24	2.44	22	2.49	21	2.53	20	2.55	19.8	2.57	20	2.58	21	2.58	20	2.57	18.9	2.49	18.9	2.26	18.9		
	1750	5145		5000		4847		4685		4515		4338		4152		3953		3740		3507		3226		2843	
		2.86	26	2.93	24	2.99	23	3.04	22	3.08	21	3.10	21	3.12	23	3.13	23	3.13	22	3.13	21	3.09	21	2.97	21

MAXIMUM MOTOR FRAME SIZE: 184T

NOTES:
1. Performance certified is for Installation Type AB Free inlet, ducted outlet.
2. Power rating (BHP) does not include transmission losses.
3. Performance ratings do not include the effects of appurtenances (accessories).
4. The sound ratings shown are loudness values in fan sones at 1.5m (5 ft.) in a hemispherical free field calculated per AMCA International Standard 301.
5. Values shown are for installation type B: free inlet hemispherical sone levels.

BSI 210A

Outlet Area = 7.18 ft² **Fan Efficiency Grade: FEG56**

HP	RPM	STATIC PRESSURE (INCHES W.G.)																							
		0.125		0.25		0.375		0.50		0.625		0.75		1.00		1.25		1.50		1.75		2.00		2.25	
		CFM		CFM		CFM		CFM		CFM		CFM		CFM		CFM		CFM		CFM		CFM		CFM	
		BHP	Sone	BHP	Sone	BHP	Sone	BHP	Sone	BHP	Sone	BHP	Sone	BHP	Sone	BHP	Sone	BHP	Sone	BHP	Sone	BHP	Sone	BHP	Sone
1/3	550	3133		2689		2192																			
		0.24	6.8	0.25	6	0.25	6.4																		
	610	3549		3165		2785		2195																	
		0.32	8.6	0.33	6.9	0.34	7.7	0.33	7.4																
1/2	660	3889		3563		3187		2808		2042															
		0.40	10.2	0.42	8.3	0.43	8.3	0.43	9	0.39	8.6														
	700	4157		3868		3500		3179		2704															
		0.47	11.5	0.49	9.5	0.51	8.8	0.52	9.6	0.51	9.7														
3/4	755	4523		4268		3940		3624		3308		2804													
		0.59	13.4	0.61	11.4	0.63	10	0.65	10.4	0.65	11	0.63	11.1												
	805	4852		4621		4337		4016		3740		3405													
		0.71	15.1	0.74	13.4	0.76	11.4	0.78	10.9	0.79	12.1	0.79	12.4												
1	845	5114		4898		4645		4335		4058		3787		2802											
		0.82	16.3	0.85	15	0.87	13	0.89	12	0.90	12.5	0.91	13.3	0.85	13.2										
	885	5375		5172		4942		4656		4372		4122		3415											
		0.94	17.4	0.97	16.2	0.99	14.5	1.02	13	1.03	13.2	1.04	14.1	1.02	14.3										
1 1/2	950	5797		5612		5407		5167		4888		4637		4137		3231									
		1.16	19.2	1.19	18.6	1.22	16.9	1.24	15.5	1.26	14.3	1.28	14.9	1.30	16	1.21	16.1								
	1010	6185		6013		5826		5619		5369		5109		4663		4072									
		1.39	21	1.42	21	1.45	19.4	1.48	17.7	1.51	16	1.53	16	1.55	17.3	1.54	17.3								
2	1065	6540		6378		6205		6017		5799		5551		5103		4652		3927							
		1.63	22	1.66	22	1.69	21	1.72	19.9	1.75	18.1	1.78	17.1	1.81	18.2	1.83	19.2	1.76	18.2						
	1115	6861		6708		6545		6371		6177		5950		5495		5096		4560		3650					
		1.87	24	1.90	24	1.93	24	1.96	22	1.99	20	2.02	19.1	2.07	19.1	2.09	20	2.07	20	1.93	19.3				
3	1200	7406		7265		7118		6961		6793		6606		6170		5779		5400		4875		4057			
		2.32	26	2.36	26	2.39	26	2.43	25	2.46	24	2.49	22	2.55	21	2.59	22	2.61	23	2.58	22	2.44	21		
	1275	7885		7754		7617		7473		7321		7159		6771		6367		6018		5644		5120		4343	
		2.78	29	2.82	29	2.86	29	2.89	28	2.93	27	2.96	26	3.03	23	3.08	23	3.12	24	3.13	25	3.09	24	2.94	23

MAXIMUM MOTOR FRAME SIZE: 184T

BSI 210AHP

Outlet Area = 7.18 ft² **Fan Efficiency Grade: FEG56**

HP	RPM	STATIC PRESSURE (INCHES W.G.)																							
		0.25		0.50		0.75		1.00		1.25		1.50		1.75		2.00		2.25		2.50		2.75		3.00	
		CFM		CFM		CFM		CFM		CFM		CFM		CFM		CFM		CFM		CFM		CFM		CFM	
		BHP	Sone	BHP	Sone	BHP	Sone	BHP	Sone	BHP	Sone	BHP	Sone	BHP	Sone	BHP	Sone	BHP	Sone	BHP	Sone	BHP	Sone	BHP	Sone
1/2	700	2665		2166																					
		0.33	7.3	0.34	7.4																				
	810	3208		2816		2338																			
		0.49	10.0	0.52	8.8	0.53	9.3																		
3/4	865	3471		3118		2702		2144																	
		0.59	11.3	0.63	10.0	0.64	10.6	0.63	9.5																
	925	3755		3435		3066		2628		1894															
		0.72	12.9	0.76	11.7	0.78	11.7	0.79	11.6	0.72	10.6														
1	970	3966		3668		3325		2934		2424															
		0.82	14.0	0.87	12.6	0.90	12.2	0.91	13.0	0.89	11.5														
	1015	4175		3895		3576		3221		2798		2102													
		0.93	14.9	0.99	13.9	1.02	13.0	1.04	13.8	1.04	12.6	0.96	12.2												
1 1/2	1090	4521		4267		3982		3668		3316		2895		2164											
		1.15	16.7	1.21	15.8	1.26	14.3	1.28	14.3	1.29	15.1	1.28	13.2	1.17	13.2										
	1165	4864		4630		4374		4091		3785		3440		3024		2309									
		1.39	18.3	1.46	17.4	1.52	16.3	1.55	15.5	1.57	16.3	1.58	16.4	1.56	14.8	1.42	14.4								
2	1220	5115		4894		4654		4391		4109		3800		3450		2999									
		1.59	19.4	1.66	18.8	1.73	17.6	1.77	16.6	1.80	16.7	1.81	17.5	1.81	16.7	1.77	15.5								
	1280	5387		5178		4955		4711		4449		4169		3860		3510		3037							
		1.82	21	1.91	21	1.98	19.0	2.03	17.9	2.06	17.6	2.08	18.5	2.09	18.7	2.09	17.2	2.02	16.6						
3	1370	5793		5600		5396		5178		4942		4693		4428		4137		3815		3412		2776			
		2.22	23	2.31	23	2.39	22	2.46	20	2.50	19.1	2.54	19.1	2.55	20	2.56	20	2.56	19.1	2.52	18.4	2.34	18.4		
	1465	6220		6041		5854		5656		5445		5220		4985		4736		4466		4172		3830		3361	
		2.70	25	2.80	25	2.89	24	2.97	23	3.03	21	3.07	21	3.11	21	3.12	22	3.13	22	3.13	21	3.11	19.8	3	19.9

MAXIMUM MOTOR FRAME SIZE: 184T

NOTES:
1. Performance certified is for Installation Type B: Free inlet, ducted outlet.
2. Power rating (BHP) does not include transmission losses.
3. Performance ratings do not include the effects of appurtenances (accessories).
4. The sound ratings shown are loudness values in fan sones at 1.5m (5 ft.) in a hemispherical free field calculated per AMCA International Standard 301.
5. Values shown are for installation type B: free inlet hemispherical sone levels.

BSI 225A

Outlet Area = 8.03 ft² **Fan Efficiency Grade: FEG56**

HP	RPM	STATIC PRESSURE (INCHES W.G.)																							
		0.125		0.25		0.375		0.50		0.625		0.75		1.00		1.25		1.50		1.75		2.00		2.25	
		CFM		CFM		CFM		CFM		CFM		CFM		CFM		CFM		CFM		CFM		CFM		CFM	
		BHP	Sone	BHP	Sone	BHP	Sone	BHP	Sone	BHP	Sone	BHP	Sone	BHP	Sone	BHP	Sone	BHP	Sone	BHP	Sone	BHP	Sone	BHP	Sone
1/3	450	3358		2784																					
		0.21	5.5	0.22	5.7																				
	520	4017		3578		3008																			
		0.32	7.5	0.34	7.0	0.35	7.5																		
1/2	560	4384		3994		3518		2870																	
		0.40	8.7	0.42	8.1	0.43	8.7	0.42	7.5																
	600	4746		4395		3981		3467		2620															
		0.48	9.9	0.51	8.9	0.53	9.3	0.53	9.5	0.49	8.0														
3/4	640	5105		4783		4416		3982		3436															
		0.58	11.1	0.61	10.1	0.63	9.9	0.65	10.7	0.63	9.7														
	685	5505		5211		4883		4509		4065		3500													
		0.71	12.1	0.74	11.5	0.77	10.9	0.79	11.6	0.79	11.6	0.77	10.3												
1	720	5814		5538		5235		4896		4506		4041													
		0.82	13.1	0.85	12.8	0.89	11.8	0.91	11.9	0.92	12.6	0.91	12.5												
	750	6078		5816		5531		5215		4861		4448													
		0.92	14.1	0.96	13.9	0.99	12.6	1.02	12.6	1.04	13.3	1.04	13.5												
1 1/2	810	6603		6364		6109		5831		5528		5190		4353											
		1.15	15.6	1.19	15.6	1.23	14.3	1.27	13.6	1.29	13.8	1.31	14.6	1.29	13.9										
	865	7081		6861		6626		6376		6106		5813		5123		4138									
		1.39	16.8	1.44	16.8	1.49	15.9	1.52	14.7	1.56	14.7	1.58	15.3	1.59	15.9	1.52	13.6								
2	910	7472		7263		7044		6812		6564		6297		5691		4933									
		1.61	17.9	1.67	17.9	1.72	17.2	1.76	15.8	1.79	15.5	1.82	15.5	1.86	16.9	1.83	15.9								
	950	7817		7619		7411		7193		6961		6714		6163		5500		4586							
		1.83	18.4	1.89	18.4	1.94	18.3	1.99	16.9	2.03	16.5	2.06	16.0	2.10	17.4	2.10	17.7	2.01	15.6						
3	1025	8464		8282		8093		7895		7689		7471		6996		6454		5810		4930					
		2.29	19.9	2.35	19.9	2.41	19.9	2.46	19.0	2.51	18.4	2.55	17.8	2.62	17.9	2.65	19.5	2.64	19.1	2.53	17.1				
	1085	8980		8809		8632		8448		8258		8058		7629		7152		6604		5960		5019			
		2.71	21	2.77	21	2.84	21	2.89	21	2.95	20	3.00	19.4	3.07	18.8	3.13	20	3.15	21	3.11	20	2.96	18.3		
5	1185	9837		9682		9522		9358		9188		9012		8641		8237		7794		7297		6729		6036	
		3.51	23	3.59	23	3.66	23	3.72	23	3.78	23	3.84	22	3.94	21	4.02	20	4.07	22	4.10	23	4.07	23	3.97	21
	1285	10692		10550		10404		10255		10101		9944		9615		9263		8885		8476		8024		7519	
		4.47	26	4.55	26	4.62	26	4.70	26	4.77	26	4.83	25	4.95	24	5.05	23	5.13	23	5.19	24	5.22	25	5.21	25

MAXIMUM MOTOR FRAME SIZE: 215T

BSI 225AHP

Outlet Area = 8.03 ft² **Fan Efficiency Grade: FEG56**

HP	RPM	STATIC PRESSURE (INCHES W.G.)																							
		0.75		1.00		1.25		1.50		1.75		2.00		2.25		2.50		2.75		3.00		3.25		3.50	
		CFM		CFM		CFM		CFM		CFM		CFM		CFM		CFM		CFM		CFM		CFM		CFM	
		BHP	Sone	BHP	Sone	BHP	Sone	BHP	Sone	BHP	Sone	BHP	Sone	BHP	Sone	BHP	Sone	BHP	Sone	BHP	Sone	BHP	Sone	BHP	Sone
3/4	725	2733																							
		0.62	9.1																						
	785	3288		2568																					
		0.79	10.8	0.76	9.7																				
1	820	3625		2986																					
		0.91	11.5	0.89	10.9																				
	860	3982		3369		2599																			
		1.04	11.8	1.04	11.8	0.98	11.1																		
1 1/2	920	4451		3927		3372		2337																	
		1.26	12.6	1.28	13.4	1.26	12.9	1.12	12.1																
	985	4919		4530		3981		3446		2228															
		1.52	14.0	1.56	14.3	1.57	14.8	1.53	13.7	1.30	12.9														
2	1035	5266		4933		4453		3956		3349															
		1.75	15.0	1.80	15.0	1.82	16.0	1.81	15.6	1.74	14.5														
	1085	5606		5306		4923		4416		3953		3238													
		1.99	15.9	2.05	15.8	2.09	16.8	2.09	17.0	2.06	16.3	1.95	15.4												
3	1160	6108		5838		5537		5130		4660		4227		3590											
		2.40	17.9	2.47	17.5	2.53	17.5	2.56	18.6	2.56	18.6	2.52	17.6	2.42	16.9										
	1240	6635		6387		6126		5826		5417		4981		4580		4044		2974							
		2.91	19.9	2.98	19.5	3.05	18.8	3.11	19.7	3.13	20	3.12	20	3.09	19.6	3.00	18.6	2.67	18.0						
5	1355	7378		7156		6927		6687		6417		6069		5651		5282		4902		4383		3466			
		3.75	24	3.83	22	3.90	22	3.98	22	4.05	22	4.08	24	4.08	24	4.06	23	4.02	22	3.91	21	3.58	21		
	1470	8110		7910		7702		7490		7268		7025		6731		6358		5987		5654		5297		4825	
		4.74	27	4.82	26	4.91	26	5.00	25	5.08	25	5.15	25	5.20	26	5.22	27	5.21	27	5.18	26	5.12	25	5.01	24

MAXIMUM MOTOR FRAME SIZE: 215T

NOTES:
1. Performance certified is for Installation Type B: Free inlet, ducted outlet.
2. Power rating (BHP) does not include transmission losses.
3. Performance ratings do not include the effects of appurtenances (accessories).
4. The sound ratings shown are loudness values in fan sones at 1.5m (5 ft.) in a hemispherical free field calculated per AMCA International Standard 301.
5. Values shown are for installation type B: free inlet hemispherical sone levels.

BSI 245A

Outlet Area = 9.77 ft² **Fan Efficiency Grade: FEG56**

HP	RPM	STATIC PRESSURE (INCHES W.G.)																							
		0.125		0.25		0.375		0.50		0.625		0.75		1.00		1.25		1.50		1.75		2.00		2.25	
		CFM		CFM		CFM		CFM		CFM		CFM		CFM		CFM		CFM		CFM		CFM		CFM	
		BHP	Sone	BHP	Sone	BHP	Sone	BHP	Sone	BHP	Sone	BHP	Sone	BHP	Sone	BHP	Sone	BHP	Sone	BHP	Sone	BHP	Sone	BHP	Sone
1/2	475	4748		4292		3692																			
		0.41	8.3	0.44	7.3	0.44	7.6																		
	505	5097		4686		4171		3523																	
		0.49	9.4	0.52	8.0	0.53	8.6	0.52	7.8																
3/4	540	5500		5129		4684		4122		3387															
		0.59	10.3	0.63	9.4	0.65	9.1	0.65	9.4	0.61	7.7														
	575	5900		5561		5166		4690		4122															
		0.70	11.5	0.75	10.6	0.77	9.8	0.79	10.5	0.78	9.9														
1	600	6183		5864		5498		5070		4545		3946													
		0.79	12.3	0.84	11.4	0.87	10.5	0.89	11.1	0.89	11.4	0.86	9.6												
	630	6522		6222		5886		5499		5040		4517													
		0.91	13.3	0.97	12.7	1.00	11.8	1.02	11.5	1.03	12.3	1.02	11.7												
1½	675	7027		6752		6452		6113		5729		5275													
		1.12	14.4	1.17	13.9	1.22	12.9	1.25	12.2	1.27	13.0	1.27	13.3												
	725	7585		7334		7063		6765		6434		6062		5173											
		1.37	15.8	1.44	15.8	1.49	14.4	1.53	13.8	1.55	13.8	1.57	14.7	1.56	14.1										
2	760	7974		7736		7483		7208		6906		6572		5767		4638									
		1.57	16.6	1.64	16.2	1.70	15.6	1.75	14.7	1.78	14.5	1.80	14.9	1.81	15.9	1.67	13.6								
	795	8362		8136		7898		7642		7364		7059		6345		5506									
		1.79	17.1	1.87	17.1	1.93	16.9	1.98	16.3	2.02	15.5	2.05	15.6	2.08	16.8	2.04	16.0								
3	850	8969		8761		8542		8310		8062		7795		7191		6453		5615							
		2.18	18.3	2.26	18.3	2.33	18.4	2.39	17.6	2.44	16.9	2.48	16.9	2.53	17.7	2.53	18.0	2.45	16.9						
	910	9630		9437		9236		9025		8803		8566		8042		7429		6712		5866					
		2.66	19.8	2.75	19.8	2.83	19.6	2.90	19.0	2.96	18.8	3.01	18.3	3.08	18.0	3.11	19.3	3.10	19.5	2.97	18.2				
5	995	10563		10389		10208		10020		9825		9620		9177		8680		8109		7454		6764			
		3.46	21	3.56	21	3.65	21	3.73	21	3.81	21	3.87	20	3.97	20	4.03	20	4.07	22	4.06	22	3.97	22		
	1080	11494		11334		11170		11000		10825		10644		10259		9835		9368		8841		8244		7629	
		4.41	25	4.51	25	4.61	25	4.71	25	4.79	24	4.87	23	5.01	23	5.10	22	5.16	23	5.20	25	5.20	25	5.13	25
7½	1160	12367		12220		12068		11913		11753		11589		11244		10871		10466		10026		9536		8986	
		5.45	28	5.56	28	5.67	28	5.77	28	5.87	27	5.96	27	6.13	26	6.25	25	6.34	25	6.40	26	6.45	27	6.45	28
	1235	13185		13047		12906		12762		12614		12462		12147		11812		11451		11063		10646		10186	
		6.56	30	6.68	30	6.79	30	6.91	30	7.01	30	7.12	30	7.30	29	7.46	28	7.58	28	7.66	28	7.73	28	7.78	30

MAXIMUM MOTOR FRAME SIZE: 215T

BSI 245AHP

Outlet Area = 9.77 ft² **Fan Efficiency Grade: FEG56**

HP	RPM	STATIC PRESSURE (INCHES W.G.)																							
		0.75		1.00		1.25		1.50		1.75		2.00		2.25		2.50		2.75		3.00		3.25		3.50	
		CFM		CFM		CFM		CFM		CFM		CFM		CFM		CFM		CFM		CFM		CFM		CFM	
		BHP	Sone	BHP	Sone	BHP	Sone	BHP	Sone	BHP	Sone	BHP	Sone	BHP	Sone	BHP	Sone	BHP	Sone	BHP	Sone	BHP	Sone	BHP	Sone
1	650	3332																							
		0.74	9.8																						
	730	4232		3570																					
		1.04	12.0	1.05	10.9																				
1½	780	4731		4208		3435																			
		1.26	12.7	1.29	13.1	1.25	11.5																		
	835	5257		4806		4248		3404																	
		1.52	13.3	1.56	14.6	1.58	14.2	1.48	12.6																
2	875	5627		5210		4739		4092																	
		1.73	14.3	1.78	15.4	1.81	16.0	1.79	13.9																
	915	5989		5602		5179		4658		3927															
		1.96	15.2	2.02	16.0	2.06	17.1	2.08	16.5	2.00	14.8														
3	980	6566		6218		5842		5432		4920		4231													
		2.37	17.2	2.45	17.4	2.51	18.6	2.54	19.2	2.55	18.0	2.46	16.5												
	1050	7176		6857		6523		6165		5773		5292		4667											
		2.87	19.8	2.96	18.9	3.04	19.7	3.10	21	3.13	21	3.13	20	3.06	18.6										
5	1150	8030		7743		7450		7143		6818		6472		6075		5585		4976							
		3.70	24	3.81	22	3.91	22	3.99	23	4.06	24	4.10	25	4.12	24	4.1	23	3.98	22						
	1245	8828		8566		8300		8027		7743		7443		7131		6788		6386		5901		5317			
		4.62	27	4.76	26	4.87	25	4.97	25	5.06	25	5.13	26	5.19	28	5.23	28	5.23	27	5.18	25	5.02	24		
7½	1335	9575		9332		9086		8837		8581		8315		8038		7750		7443		7100		6698		6226	
		5.63	30	5.78	30	5.92	28	6.04	28	6.14	28	6.23	28	6.31	30	6.38	30	6.43	30	6.45	31	6.44	29	6.37	27
	1425	10314		10089		9860		9628		9394		9154		8905		8646		8380		8102		7801		7462	
		6.77	34	6.94	34	7.10	33	7.24	32	7.36	31	7.47	31	7.57	31	7.66	32	7.73	33	7.79	34	7.83	34	7.85	34

MAXIMUM MOTOR FRAME SIZE: 215T

NOTES:
1. Performance certified is for Installation Type B: Free inlet, ducted outlet.
2. Power rating (BHP) does not include transmission losses.
3. Performance ratings do not include the effects of appurtenances (accessories).
4. The sound ratings shown are loudness values in fan sones at 1.5m (5 ft.) in a hemispherical free field calculated per AMCA International Standard 301.
5. Values shown are for installation type B: free inlet hemispherical sone levels.

BSI 270A

Outlet Area = 11.11 ft² **Fan Efficiency Grade: FEG56**

HP	RPM	STATIC PRESSURE (INCHES W.G.)																							
		0.125		0.25		0.375		0.50		0.625		0.75		1.00		1.25		1.50		1.75		2.00		2.25	
		CFM		CFM		CFM		CFM		CFM		CFM		CFM		CFM		CFM		CFM		CFM		CFM	
		BHP	Sone	BHP	Sone	BHP	Sone	BHP	Sone	BHP	Sone	BHP	Sone	BHP	Sone	BHP	Sone	BHP	Sone	BHP	Sone	BHP	Sone	BHP	Sone
1/2	375	5140		4357																					
		0.36	9.2	0.38	7.0																				
	420	5895		5263		4470																			
		0.49	11.6	0.52	8.5	0.53	8.7																		
3/4	450	6387		5839		5140		4277																	
		0.60	12.6	0.64	10.4	0.65	10.0	0.64	8.2																
	480	6874		6390		5762		5043																	
		0.72	14.1	0.77	12.9	0.79	10.3	0.79	10.6																
1	500	7196		6744		6162		5507		4690															
		0.82	15.0	0.86	14.2	0.89	11.5	0.89	11.8	0.87	9.5														
	525	7595		7178		6653		6050		5356															
		0.94	14.7	0.99	15.5	1.02	12.5	1.03	12.2	1.02	11.7														
1½	565	8230		7855		7409		6869		6290		5614													
		1.16	16.0	1.21	16.0	1.26	14.8	1.28	13.4	1.29	13.9	1.27	12.8												
	605	8861		8519		8130		7659		7140		6578													
		1.42	17.5	1.47	17.5	1.53	17.3	1.56	15.2	1.58	14.8	1.58	15.6												
2	635	9332		9010		8653		8232		7746		7240		6008											
		1.63	18.7	1.69	18.7	1.75	19.3	1.79	16.9	1.82	16.0	1.83	16.4	1.79	14.1										
	665	9801		9498		9166		8786		8340		7867		6798											
		1.87	20	1.93	20	1.99	20	2.04	18.9	2.08	17.3	2.10	17.3	2.08	17.0										
3	710	10502		10223		9921		9589		9204		8772		7853		6719									
		2.26	22	2.33	22	2.40	22	2.46	22	2.51	19.9	2.54	19.0	2.56	20	2.50	17.0								
	760	11278		11021		10746		10450		10122		9746		8922		7999		6755							
		2.76	23	2.84	23	2.91	23	2.98	23	3.04	22	3.08	21	3.14	21	3.12	22	2.98	17.4						
5	830	12361		12128		11884		11624		11347		11042		10330		9564		8702		7635					
		3.58	26	3.67	26	3.75	26	3.83	26	3.90	26	3.96	25	4.05	24	4.09	25	4.06	24	3.95	20				
	900	13440		13228		13007		12775		12531		12272		11678		10994		10281		9482		8555			
		4.55	30	4.64	30	4.73	30	4.82	30	4.90	30	4.98	30	5.10	27	5.18	27	5.21	29	5.18	28	5.09	24		
7½	965	14439		14243		14040		13829		13608		13376		12869		12272		11625		10952		10205		9365	
		5.59	33	5.69	33	5.79	33	5.89	33	5.98	33	6.06	33	6.21	32	6.33	31	6.40	30	6.42	31	6.39	31	6.31	28
	1030	15437		15254		15066		14872		14670		14460		14011		13499		12916		12307		11673		10978	
		6.78	37	6.89	37	7.00	37	7.10	37	7.20	37	7.30	37	7.47	36	7.62	35	7.73	33	7.79	34	7.81	36	7.78	34

MAXIMUM MOTOR FRAME SIZE: 215T

BSI 270AHP

Outlet Area = 11.11 ft² **Fan Efficiency Grade: FEG60**

HP	RPM	STATIC PRESSURE (INCHES W.G.)																							
		0.75		1.00		1.25		1.50		1.75		2.00		2.25		2.50		2.75		3.00		3.25		3.50	
		CFM		CFM		CFM		CFM		CFM		CFM		CFM		CFM		CFM		CFM		CFM		CFM	
		BHP	Sone	BHP	Sone	BHP	Sone	BHP	Sone	BHP	Sone	BHP	Sone	BHP	Sone	BHP	Sone	BHP	Sone	BHP	Sone	BHP	Sone	BHP	Sone
1	530	2972																							
		0.64	7.7																						
	605	4674																							
		1.04	10.1																						
1½	650	5444		4515																					
		1.29	12.2	1.28	11.1																				
	695	6139		5335		4251																			
		1.56	13.6	1.58	12.5	1.50	12.5																		
2	730	6631		5941		5113																			
		1.80	14.0	1.83	14.4	1.81	13.4																		
	760	7032		6440		5666		4611																	
		2.02	14.7	2.06	15.8	2.06	14.2	1.96	14.3																
3	815	7744		7269		6623		5891		4762															
		2.47	17.0	2.51	17.0	2.55	17.1	2.53	15.9	2.37	16.4														
	870	8438		8020		7519		6861		6171		5040													
		2.98	19.0	3.04	18.4	3.08	19.0	3.11	18.8	3.07	17.7	2.88	18.1												
5	950	9431		9055		8663		8189		7589		6965		6216											
		3.83	23	3.91	21	3.96	21	4.01	22	4.05	22	4.02	20	3.92	21										
	1030	10411		10061		9714		9345		8905		8362		7784		7184		6276							
		4.81	26	4.93	25	5.01	24	5.06	23	5.11	25	5.15	25	5.15	23	5.08	23	4.88	23						
7½	1105	11318		10989		10666		10340		9990		9580		9082		8541		8004		7374		6259			
		5.87	29	6.02	28	6.13	27	6.20	26	6.25	26	6.31	27	6.36	27	6.36	26	6.32	25	6.20	26	5.84	26		
	1185	12275		11969		11663		11363		11057		10731		10357		9911		9411		8912		8398		7756	
		7.15	33	7.33	33	7.48	31	7.58	30	7.65	29	7.70	29	7.76	30	7.82	31	7.85	30	7.83	28	7.76	29	7.61	29

MAXIMUM MOTOR FRAME SIZE: 215T

NOTES:
1. Performance certified is for Installation Type B: Free inlet, ducted outlet.
2. Power rating (BHP) does not include transmission losses.
3. Performance ratings do not include the effects of appurtenances (accessories).
4. The sound ratings shown are loudness values in fan sones at 1.5m (5 ft.) in a hemispherical free field calculated per AMCA International Standard 301.
5. Values shown are for installation type B: free inlet hemispherical sone levels.

BSI 300A

Outlet Area = 13.44 ft² **Fan Efficiency Grade: FEG56**

HP	RPM	STATIC PRESSURE (INCHES W.G.)																							
		0.125		0.25		0.375		0.50		0.625		0.75		1.00		1.25		1.50		1.75		2.00		2.25	
		CFM		CFM		CFM		CFM		CFM		CFM		CFM		CFM		CFM		CFM		CFM		CFM	
		BHP	Sone	BHP	Sone	BHP	Sone	BHP	Sone	BHP	Sone	BHP	Sone	BHP	Sone	BHP	Sone	BHP	Sone	BHP	Sone	BHP	Sone	BHP	Sone
1	400	7531		6837		5958		4778																	
		0.68	12.9	0.72	10.2	0.74	9.8	0.70	7.3																
	450	8610		8054		7336		6527		5478															
		0.96	14.9	1.01	14.3	1.04	11.4	1.05	11.8	1.01	9.0														
1½	480	9248		8747		8121		7397		6570															
		1.15	16.8	1.21	16.8	1.25	13.4	1.27	13.2	1.26	12.7														
	515	9988		9535		8999		8348		7651		6839													
		1.42	17.5	1.48	17.5	1.53	15.9	1.56	14.2	1.57	14.4	1.55	13.4												
2	540	10513		10088		9602		9007		8363		7650													
		1.62	18.5	1.69	18.5	1.75	18.0	1.79	15.2	1.81	15.3	1.80	15.5												
	565	11035		10636		10188		9651		9045		8406		6721											
		1.85	19.2	1.93	19.2	1.99	19.3	2.04	16.8	2.07	15.7	2.08	16.6	1.98	12.8										
3	605	11869		11502		11101		10642		10104		9532		8240											
		2.26	21	2.34	21	2.42	21	2.48	20	2.52	18.2	2.55	17.7	2.53	17.3										
	645	12698		12360		11994		11592		11126		10602		9488		8112									
		2.73	23	2.82	23	2.90	23	2.97	23	3.03	20	3.07	19.6	3.09	20	3.01	17.4								
5	710	14040		13739		13418		13074		12700		12273		11316		10274		9019							
		3.62	26	3.72	26	3.81	26	3.89	26	3.97	26	4.03	24	4.11	23	4.11	24	4.03	20						
	770	15274		14999		14711		14406		14081		13729		12903		12002		11016		9858					
		4.60	28	4.71	28	4.81	28	4.90	28	4.99	28	5.07	28	5.19	25	5.25	25	5.24	27	5.15	24				
7½	825	16402		16148		15883		15606		15314		15005		14300		13484		12632		11690		10607			
		5.64	31	5.76	31	5.87	31	5.97	31	6.07	31	6.16	31	6.32	30	6.42	28	6.47	30	6.44	29	6.34	26		
	880	17527		17291		17046		16791		16525		16247		15636		14919		14139		13330		12435		11429	
		6.83	34	6.95	34	7.07	34	7.19	34	7.30	34	7.40	34	7.59	32	7.73	32	7.82	31	7.85	33	7.81	33	7.71	30

MAXIMUM MOTOR FRAME SIZE: 215T

BSI 300AHP

Outlet Area = 13.44 ft² **Fan Efficiency Grade: FEG60**

HP	RPM	STATIC PRESSURE (INCHES W.G.)																							
		0.50		0.75		1.00		1.25		1.50		1.75		2.00		2.25		2.50		2.75		3.00		3.25	
		CFM		CFM		CFM		CFM		CFM		CFM		CFM		CFM		CFM		CFM		CFM		CFM	
		BHP	Sone	BHP	Sone	BHP	Sone	BHP	Sone	BHP	Sone	BHP	Sone	BHP	Sone	BHP	Sone	BHP	Sone	BHP	Sone	BHP	Sone	BHP	Sone
1	390	2715																							
		0.40	5.6																						
	515	6049		4817																					
		1.02	9.6	1.02	8.8																				
1½	550	6697		5656																					
		1.24	10.5	1.26	10.3																				
	590	7396		6568		5439																			
		1.52	12.1	1.55	12.5	1.54	11.2																		
2	620	7905		7196		6180		4525																	
		1.75	13.6	1.79	13.9	1.81	12.0	1.63	12.3																
	650	8407		7773		6876		5807																	
		2.00	15.4	2.05	14.1	2.09	14.4	2.04	13.6																
3	700	9233		8668		7984		7069		5958															
		2.47	18.2	2.54	15.7	2.59	16.7	2.60	15.1	2.51	15.2														
	745	9968		9440		8872		8107		7228		5967													
		2.95	21	3.04	17.5	3.09	17.6	3.14	18.0	3.12	16.2	2.96	16.8												
5	810	11018		10527		10039		9480		8742		7935		6942											
		3.73	23	3.87	21	3.94	19.4	3.99	20	4.04	20	4.02	18.6	3.89	19.5										
	880	12133		11679		11233		10774		10241		9558		8815		8022		6584							
		4.71	25	4.89	25	5.00	23	5.06	22	5.12	23	5.17	23	5.17	22	5.08	22	4.73	22						
7½	945	13157		12737		12316		11901		11464		10951		10314		9620		8917		7959					
		5.77	28	5.98	28	6.13	26	6.22	25	6.28	25	6.35	26	6.40	26	6.41	24	6.34	24	6.15	25				
	1010	14173		13782		13386		12997		12605		12188		11702		11112		10461		9818		9087		7869	
		6.97	30	7.21	30	7.40	30	7.53	27	7.61	27	7.68	27	7.75	28	7.81	28	7.83	28	7.78	26	7.66	26	7.28	27

MAXIMUM MOTOR FRAME SIZE: 215T

NOTES:
1. Performance certified is for Installation Type B: Free inlet, ducted outlet.
2. Power rating (BHP) does not include transmission losses.
3. Performance ratings do not include the effects of appurtenances (accessories).
4. The sound ratings shown are loudness values in fan sones at 1.5m (5 ft.) in a hemispherical free field calculated per AMCA International Standard 301.
5. Values shown are for installation type B: free inlet hemispherical sone levels.

BSI 330A

Outlet Area = 16.46 ft² **Fan Efficiency Grade: FEG56**

HP	RPM	STATIC PRESSURE (INCHES W.G.)																							
		0.125		0.25		0.375		0.50		0.625		0.75		1.00		1.25		1.50		1.75		2.00		2.25	
		CFM		CFM		CFM		CFM		CFM		CFM		CFM		CFM		CFM		CFM		CFM		CFM	
		BHP	Sone	BHP	Sone	BHP	Sone	BHP	Sone	BHP	Sone	BHP	Sone	BHP	Sone	BHP	Sone	BHP	Sone	BHP	Sone	BHP	Sone	BHP	Sone
1	310	7663		6517		4805																			
		0.54	8.7	0.57	6.7	0.53	5.4																		
	380	9752		8983		7994		6823																	
		0.96	14.0	1.02	12.2	1.05	10.7	1.03	9.9																
1 1/2	405	10479		9795		8908		7908		6582															
		1.16	15.6	1.22	14.9	1.26	11.9	1.26	12.3	1.21	9.4														
	435	11343		10732		9970		9088		8082															
		1.42	17.6	1.49	17.6	1.55	14.0	1.57	13.7	1.56	13.3														
2	455	11916		11343		10654		9829		8932		7858													
		1.62	18.7	1.70	18.7	1.76	15.7	1.79	14.1	1.79	14.8	1.76	12.4												
	475	12485		11946		11318		10550		9727		8787													
		1.84	19.3	1.92	19.3	1.98	17.6	2.03	15.4	2.04	15.6	2.02	15.1												
3	510	13477		12987		12438		11779		11036		10251		8162											
		2.26	21	2.35	21	2.42	21	2.49	17.5	2.52	16.8	2.53	17.2	2.40	13.2										
	545	14463		14013		13519		12954		12290		11588		9992											
		2.74	22	2.84	22	2.93	22	3.00	21	3.05	18.5	3.08	18.3	3.05	18.0										
5	600	16005		15606		15176		14708		14175		13569		12272		10750									
		3.63	25	3.74	25	3.84	25	3.94	25	4.01	23	4.07	21	4.12	21	4.06	20								
	650	17401		17037		16652		16240		15792		15286		14137		12898		11434							
		4.60	28	4.72	28	4.83	28	4.94	28	5.03	28	5.11	26	5.21	23	5.23	25	5.15	22						
7 1/2	700	18792		18458		18108		17737		17344		16918		15920		14826		13637		12250					
		5.72	32	5.85	32	5.98	32	6.09	32	6.20	32	6.30	30	6.45	27	6.53	27	6.52	28	6.42	25				
	745	20040		19729		19405		19065		18707		18329		17465		16464		15420		14263		12932			
		6.88	34	7.02	34	7.15	34	7.28	34	7.40	34	7.52	34	7.71	30	7.83	29	7.88	31	7.84	31	7.73	27		
10	780	21010		20714		20407		20088		19753		19401		18623		17707		16728		15697		14538		13186	
		7.88	35	8.03	35	8.17	35	8.31	35	8.44	35	8.56	35	8.78	33	8.93	32	9.03	32	9.04	33	8.97	32	8.8	28
	820	22116		21837		21547		21247		20935		20610		19907		19089		18175		17235		16226		15099	
		9.14	38	9.29	38	9.44	38	9.59	38	9.73	38	9.86	38	10.11	36	10.30	35	10.43	34	10.50	35	10.49	36	10.41	34

MAXIMUM MOTOR FRAME SIZE: 256T

BSI 330AHP

Outlet Area = 16.46 ft² **Fan Efficiency Grade: FEG60**

HP	RPM	STATIC PRESSURE (INCHES W.G.)																							
		0.75		1.00		1.25		1.50		1.75		2.00		2.25		2.50		2.75		3.00		3.25		3.50	
		CFM		CFM		CFM		CFM		CFM		CFM		CFM		CFM		CFM		CFM		CFM		CFM	
		BHP	Sone	BHP	Sone	BHP	Sone	BHP	Sone	BHP	Sone	BHP	Sone	BHP	Sone	BHP	Sone	BHP	Sone	BHP	Sone	BHP	Sone	BHP	Sone
1 1/2	440	4716																							
		1.00	8.4																						
	500	7005		4831																					
		1.57	10.7	1.40	10.3																				
2	525	7782		6329																					
		1.82	12.4	1.78	11.2																				
	550	8512		7221																					
		2.08	13.3	2.08	11.9																				
3	590	9567		8485		7198																			
		2.54	14.6	2.58	15.0	2.53	13.8																		
	630	10536		9686		8557		7137																	
		3.07	16.4	3.12	16.9	3.14	15.3	3.01	15.6																
5	690	11923		11264		10413		9369		8178															
		3.99	19.5	4.05	18.7	4.12	19.8	4.12	17.7	4.01	17.8														
	745	13162		12577		11928		11082		10111		9053													
		4.97	23	5.06	21	5.12	21	5.19	22	5.19	19.8	5.08	20												
7 1/2	800	14385		13842		13285		12645		11827		10922		9976		8380									
		6.07	27	6.21	24	6.29	23	6.36	24	6.43	24	6.43	22	6.34	22	5.98	23								
	855	15596		15081		14573		14039		13413		12637		11787		10930		9770							
		7.33	29	7.51	27	7.62	26	7.70	25	7.78	27	7.85	27	7.85	25	7.78	25	7.54	25						
10	900	16576		16084		15602		15113		14583		13953		13193		12386		11574		10550		8575			
		8.46	31	8.69	31	8.84	28	8.93	27	9.01	28	9.10	29	9.16	29	9.16	27	9.08	26	8.87	27	8.12	26		
	940	17440		16970		16504		16043		15562		15027		14386		13638		12867		12088		11130		9424	
		9.57	33	9.82	33	10.01	31	10.13	30	10.21	30	10.30	30	10.39	32	10.44	30	10.43	29	10.35	28	10.14	29	9.5	29

MAXIMUM MOTOR FRAME SIZE: 256T

NOTES:
1. Performance certified is for Installation Type B: Free inlet, ducted outlet.
2. Power rating (BHP) does not include transmission losses.
3. Performance ratings do not include the effects of appurtenances (accessories).
4. The sound ratings shown are loudness values in fan sones at 1.5m (5 ft.) in a hemispherical free field calculated per AMCA International Standard 301.
5. Values shown are for installation type B: free inlet hemispherical sone levels.

BSI 365A

Outlet Area = 17.36 ft² **Fan Efficiency Grade: FEG53**

HP	RPM	STATIC PRESSURE (INCHES W.G.)																							
		0.125		0.25		0.375		0.50		0.625		0.75		0.875		1.00		1.25		1.50		1.75		2.00	
		CFM		CFM		CFM		CFM		CFM		CFM		CFM		CFM		CFM		CFM		CFM		CFM	
		BHP	Sone	BHP	Sone	BHP	Sone	BHP	Sone	BHP	Sone	BHP	Sone	BHP	Sone	BHP	Sone	BHP	Sone	BHP	Sone	BHP	Sone	BHP	Sone
1	240	7252		5314																					
		0.43	4.2	0.41	4.0																				
	320	10451		9423		8064																			
		0.98	8.7	1.01	7.7	1.01	8.3																		
1½	345	11407		10491		9375		7885																	
		1.21	10.6	1.26	9.2	1.28	9.8	1.23	8.7																
	370	12351		11523		10562		9338																	
		1.48	12.1	1.55	11.1	1.57	11.0	1.57	11.6																
2	385	12914		12129		11237		10145		8770															
		1.67	13.2	1.73	12.3	1.77	11.6	1.77	12.4	1.71	11.0														
	405	13659		12926		12107		11150		9953															
		1.93	14.3	2.01	13.8	2.05	12.9	2.06	13.6	2.04	13.5														
3	435	14771		14101		13368		12548		11578		10406													
		2.38	15.9	2.46	15.7	2.52	14.5	2.55	14.5	2.56	15.4	2.51	14.5												
	465	15875		15258		14592		13866		13049		12081		10956											
		2.89	17.3	2.99	17.3	3.06	16.1	3.10	15.6	3.12	16.5	3.12	16.6	3.06	15.7										
5	505	17338		16779		16185		15548		14857		14087		13194		12173									
		3.68	19.9	3.79	19.9	3.88	19.4	3.95	18.0	3.98	17.9	4.00	18.1	4.00	19.0	3.94	17.9								
	550	18976		18469		17937		17374		16777		16135		15430		14633		12747							
		4.72	23	4.85	23	4.96	23	5.05	21	5.11	19.9	5.14	19.7	5.16	21	5.17	21	5.03	18.8						
7½	590	20425		19957		19470		18959		18422		17854		17248		16591		15040		13163					
		5.81	25	5.95	25	6.07	25	6.18	24	6.27	23	6.32	22	6.35	22	6.37	23	6.37	23	6.11	20				
	630	21870		21435		20984		20516		20027		19515		18977		18407		17121		15565		13694			
		7.05	29	7.20	29	7.34	29	7.46	27	7.57	26	7.65	25	7.70	24	7.73	23	7.77	25	7.71	25	7.34	21		
10	660	22951		22538		22111		21669		21211		20733		20235		19712		18566		17212		15635			
		8.09	31	8.25	31	8.40	31	8.53	31	8.65	29	8.75	27	8.82	27	8.87	25	8.92	26	8.93	27	8.75	25		
	695	24210		23820		23418		23003		22575		22131		21671		21192		20163		18996		17625		16081	
		9.43	34	9.60	34	9.76	34	9.90	34	10.04	33	10.15	31	10.25	29	10.31	29	10.39	29	10.43	30	10.40	29	10.14	26

MAXIMUM MOTOR FRAME SIZE: 256T

BSI 365AHP

Outlet Area = 17.36 ft² **Fan Efficiency Grade: FEG56**

HP	RPM	STATIC PRESSURE (INCHES W.G.)																							
		0.25		0.50		0.75		1.00		1.25		1.50		1.75		2.00		2.25		2.50		2.75		3.00	
		CFM		CFM		CFM		CFM		CFM		CFM		CFM		CFM		CFM		CFM		CFM		CFM	
		BHP	Sone	BHP	Sone	BHP	Sone	BHP	Sone	BHP	Sone	BHP	Sone	BHP	Sone	BHP	Sone	BHP	Sone	BHP	Sone	BHP	Sone	BHP	Sone
1½	380	8578		7022																					
		1.10	8.6	1.15	8.9																				
	420	9743		8471		6844																			
		1.47	11.0	1.54	10.3	1.56	10.9																		
2	440	10320		9147		7646																			
		1.67	12.3	1.75	10.9	1.80	12.0																		
	460	10895		9791		8397		6313																	
		1.90	13.7	1.99	11.2	2.04	12.5	1.82	12.5																
3	495	11892		10869		9691		8320																	
		2.33	15.5	2.46	13.1	2.53	13.6	2.56	14.3																
	530	12878		11913		10907		9652		8246															
		2.82	17.9	3.00	14.6	3.07	14.6	3.13	15.4	3.09	14.9														
5	575	14135		13229		12355		11313		10134		8699													
		3.55	21	3.78	17.4	3.88	16.0	3.96	17.0	4.01	17.0	3.87	16.2												
	625	15519		14674		13874		13026		12001		10917		9638											
		4.50	23	4.79	20	4.93	18.3	5.02	18.1	5.10	19.3	5.15	18.6	5.04	17.3										
7½	670	16756		15964		15204		14454		13598		12604		11599		10408									
		5.49	26	5.83	24	6.03	21	6.13	20	6.22	21	6.30	21	6.35	21	6.23	19.3								
	720	18122		17382		16660		15970		15249		14414		13477		12542		11517		9203					
		6.74	30	7.13	28	7.41	25	7.55	23	7.64	23	7.75	24	7.83	25	7.87	24	7.82	22	6.71	22				
10	755	19074		18366		17671		17008		16343		15607		14763		13855		12971		11949		9636			
		7.72	32	8.15	31	8.47	28	8.65	26	8.76	25	8.86	25	8.97	27	9.04	27	9.08	26	8.99	24	7.74	24		
	790	20023		19345		18677		18034		17406		16745		15995		15159		14291		13446		12438		10227	
		8.80	35	9.27	34	9.62	31	9.86	29	9.99	28	10.09	28	10.21	28	10.31	30	10.36	29	10.41	27	10.28	26	8.91	26

MAXIMUM MOTOR FRAME SIZE: 256T

NOTES:
1. Performance certified is for Installation Type B: Free inlet, ducted outlet.
2. Power rating (BHP) does not include transmission losses.
3. Performance ratings do not include the effects of appurtenances (accessories).
4. The sound ratings shown are loudness values in fan sones at 1.5m (5 ft.) in a hemispherical free field calculated per AMCA International Standard 301.
5. Values shown are for installation type B: free inlet hemispherical sone levels.

BSI 402A

Outlet Area = 21.20 ft² **Fan Efficiency Grade: FEG53**

HP	RPM	STATIC PRESSURE (INCHES W.G.)																							
		0.125		0.25		0.375		0.50		0.625		0.75		0.875		1.00		1.125		1.25		1.50		1.75	
		CFM		CFM		CFM		CFM		CFM		CFM		CFM		CFM		CFM		CFM		CFM		CFM	
		BHP	Sone	BHP	Sone	BHP	Sone	BHP	Sone	BHP	Sone	BHP	Sone	BHP	Sone	BHP	Sone	BHP	Sone	BHP	Sone	BHP	Sone	BHP	Sone
1½	290	12803		11551		9898																			
		1.20	8.6	1.25	7.5	1.25	8.1																		
	310	13837		12708		11321		9460																	
		1.45	10.3	1.51	8.9	1.53	9.4	1.47	8.2																
2	325	14605		13550		12305		10677																	
		1.67	11.1	1.74	10.1	1.76	10.1	1.74	10.2																
	340	15368		14377		13238		11810		9946															
		1.90	12.4	1.98	11.4	2.01	11.1	2.01	11.5	1.90	10.1														
3	365	16630		15729		14722		13542		12064															
		2.33	14.5	2.43	13.5	2.48	12.7	2.50	13.4	2.47	13.4														
	390	17882		17054		16146		15127		13911		12447													
		2.83	16.1	2.94	15.8	3.01	14.7	3.04	14.6	3.05	15.5	2.98	14.5												
5	430	19870		19136		18347		17491		16540		15433		14130		12574									
		3.76	19.1	3.89	19.1	3.99	17.6	4.05	16.7	4.07	17.3	4.08	17.8	4.03	17.4	3.85	15.8								
	465	21599		20929		20220		19462		18644		17742		16707		15514		14190							
		4.73	22	4.88	22	4.99	20	5.08	19.1	5.13	18.7	5.15	19.2	5.16	20	5.12	19.8	4.96	17.8						
7½	500	23319		22703		22057		21374		20649		19871		19021		18061		16972		15788					
		5.86	24	6.02	24	6.15	23	6.27	22	6.34	21	6.38	21	6.41	22	6.42	23	6.39	22	6.26	20				
	535	25032		24462		23867		23245		22591		21900		21163		20365		19476		18483		16212			
		7.15	27	7.32	27	7.48	27	7.61	25	7.72	24	7.78	23	7.82	23	7.85	23	7.87	25	7.84	24	7.54	21		
10	555	26009		25462		24893		24300		23679		23028		22340		21604		20804		19915		17876			
		7.97	28	8.15	28	8.31	28	8.46	27	8.58	25	8.66	25	8.71	24	8.75	24	8.77	25	8.78	25	8.62	24		
	585	27471		26955		26421		25867		25290		24689		24060		23396		22690		21928		20169		18133	
		9.31	30	9.50	30	9.68	30	9.84	30	9.98	28	10.09	27	10.17	26	10.21	26	10.25	26	10.27	27	10.25	27	9.95	24

MAXIMUM MOTOR FRAME SIZE: 256T

BSI 402AHP

Outlet Area = 21.20 ft² **Fan Efficiency Grade: FEG56**

HP	RPM	STATIC PRESSURE (INCHES W.G.)																							
		0.50		0.75		1.00		1.25		1.50		1.75		2.00		2.25		2.50		2.75		3.00		3.25	
		CFM		CFM		CFM		CFM		CFM		CFM		CFM		CFM		CFM		CFM		CFM		CFM	
		BHP	Sone	BHP	Sone	BHP	Sone	BHP	Sone	BHP	Sone	BHP	Sone	BHP	Sone	BHP	Sone	BHP	Sone	BHP	Sone	BHP	Sone	BHP	Sone
1½	300	6115																							
		0.91	6.6																						
	355	9151																							
		1.55	9.6																						
2	370	9886		7706																					
		1.74	10.2	1.73	10.7																				
	390	10821		8929																					
		2.02	10.8	2.07	12.0																				
3	420	12135		10463		8217																			
		2.50	12.2	2.57	13.2	2.40	13.4																		
	445	13174		11713		10021																			
		2.95	13.2	3.04	14.1	3.07	14.3																		
5	490	14984		13808		12337		10775																	
		3.90	15.7	3.99	15.3	4.08	16.7	4.09	16.3																
	530	16559		15516		14303		12888		11382															
		4.88	18.7	5.00	17.1	5.11	17.7	5.17	18.5	5.14	17.8														
7½	570	18119		17148		16129		14901		13583		12127													
		6.00	22	6.18	19.2	6.28	19.1	6.39	20	6.45	20	6.38	19.0												
	605	19474		18544		17626		16575		15355		14125		12645											
		7.09	24	7.33	22	7.45	21	7.57	22	7.67	22	7.72	21	7.56	20										
10	640	20817		19924		19066		18152		17082		15903		14747		13278									
		8.30	28	8.61	24	8.77	22	8.88	22	9.01	24	9.09	24	9.14	23	8.91	22								
	670	21960		21097		20275		19437		18492		17412		16282		15169		13598							
		9.45	30	9.81	27	10.01	25	10.13	24	10.26	25	10.38	26	10.45	26	10.49	24	10.06	23						
15	715	23663		22847		22062		21294		20488		19572		18551		17490		16459		15234		12566			
		11.35	35	11.79	31	12.07	28	12.23	28	12.35	28	12.50	28	12.62	30	12.69	28	12.75	27	12.59	26	10.93	26		
	765	25541		24774		24023		23303		22582		21815		20953		20004		19011		18045		17034		15602	
		13.74	40	14.25	36	14.63	34	14.87	32	15.01	31	15.15	31	15.31	32	15.44	34	15.53	33	15.59	32	15.59	30	15.03	30

MAXIMUM MOTOR FRAME SIZE: 256T

NOTES:
1. Performance certified is for Installation Type B: Free inlet, ducted outlet.
2. Power rating (BHP) does not include transmission losses.
3. Performance ratings do not include the effects of appurtenances (accessories).
4. The sound ratings shown are loudness values in fan sones at 1.5m (5 ft.) in a hemispherical free field calculated per AMCA International Standard 301.
5. Values shown are for installation type B: free inlet hemispherical sone levels.

Model DSI, Direct Drive

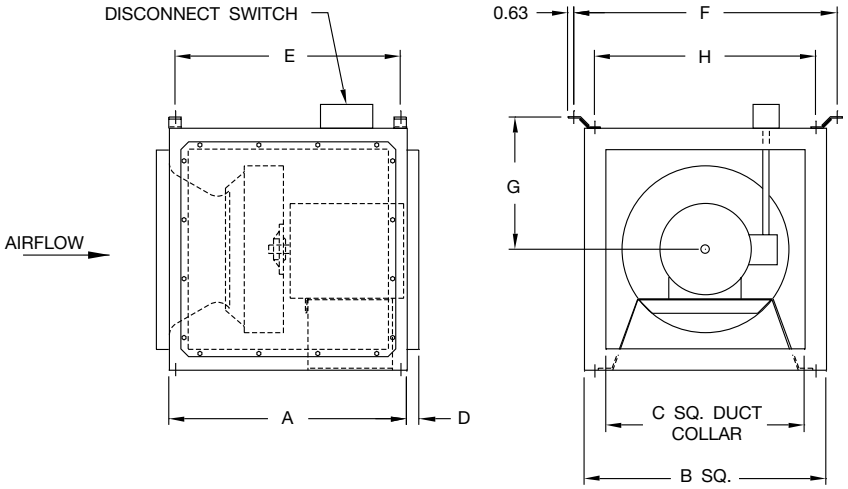

MODEL DSI	EC MOTOR SIZES	A	B	C	D	E	F	G	H	DAMPER SIZE	AVG. SHIP WT. (LBS.)	SIDE DISCHARGE SIZE
080A	080AE	19.00	15.33	11.88	1.00	16.50	19.50	8.63	13.56	12.00 x 12.00	93	11.88 x 11.88
090A	090AE	19.00	15.33	11.88	1.00	16.50	19.50	8.63	13.56	12.00 x 12.00	96	11.88 x 11.88
100A	100AE	20.50	17.81	13.88	1.00	19.00	21.06	10.38	16.00	14.00 x 14.00	106	13.88 x 13.88
120A	120AE	21.50	19.38	15.88	1.00	20.00	22.06	11.13	17.00	16.00 x 16.00	127	15.88 x 15.88
135A/135AN	135AE/ANE	23.00	21.56	17.88	1.00	21.50	24.25	12.19	19.16	18.00 x 18.00	132	17.88 x 17.88
150A/150AN	150AE/ANE	24.00	23.82	19.88	1.00	22.50	26.38	13.29	21.31	20.00 x 20.00	157	19.88 x 19.88
165A/165AN	165AE/ANE	26.00	26.50	22.88	1.00	24.50	29.06	14.64	24.00	23.00 x 23.00	167	22.88 x 22.88

D-4210J

Notes:
1. All figures are in inches unless noted otherwise.
2. Average ship weight is for fan and motor assembly.
3. Dimensions are not to be used for construction.

Filter Box Assembly

SIZE	A SQ.	B	C	D	E	F	FILTER SIZE	FILTER QTY.	AVG. SHIP WT. (LBS.)
080/090	16.00	18.50	11.88	21.44	28.38	47.38	25x16x2	1	99
100	18.06	20.56	13.88	19.88	26.75	47.25	25x16x2	1	113
120/120HP	19.62	22.12	15.88	24.50	31.38	52.88	25x16x2	2	148
135/135HP	21.75	24.25	17.88	24.00	32.00	55.00	25x20x2	2	181
150/150HP	23.94	26.44	19.88	23.75	32.00	56.00	25x20x2	2	200
165/165HP	26.62	29.12	22.88	19.56	28.00	54.00	25x20x2	3	203
180/180HP	29.12	31.62	23.88	19.25	26.50	55.00	25x20x2	3	220
210/210HP	32.44	34.94	27.88	21.00	31.00	63.00	25x16x2	4	290
225/225HP	34.25	36.75	29.88	24.00	33.00	67.00	25x16x2	6	397
245/245HP	37.75	40.25	32.88	18.88	30.00	56.50	25x20x2	2	439
							25x16x2	2	
270/270HP	40.25	42.75	35.88	23.00	33.00	72.00	25x20x2	6	568
300/300HP	44.25	46.75	39.88	24.00	33.00	74.50	25x20x2	8	654
330/330HP	48.94	51.44	43.88	23.50	34.00	79.50	25x16x2	12	842
365/365HP	50.25	52.75	45.88	19.75	30.50	77.38	25x20x2	12	850
402/402HP	55.50	58.00	51.88	24.75	36.00	88.00	25x20x2	12	1150
							25x16x2	6	

D-4205-1

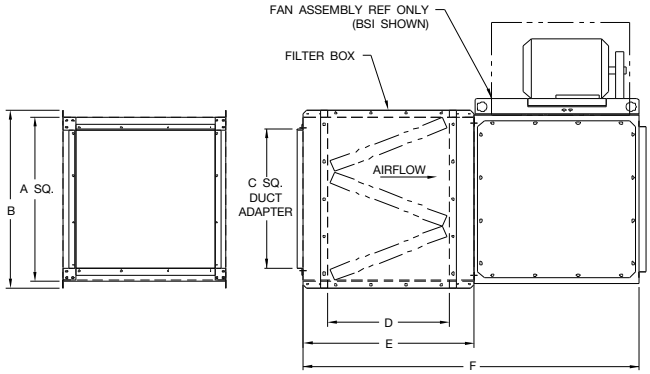

Notes:
1. All figures are in inches unless noted otherwise.
2. Filter box option is shipped separately for field installation.
3. For filter box information, see page 7.

Model BSI, Belt Driven

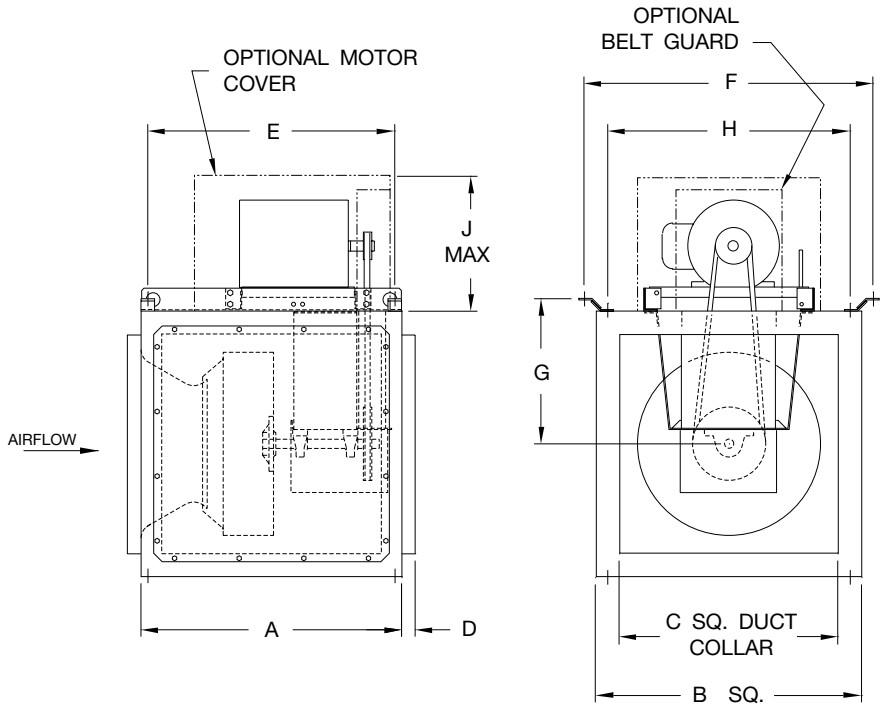

MODEL BSI	A	B	C	D	E	F	G	H	J	DAMPER SIZE	AVG. SHIP WT. (LBS.)	SIDE DISCHARGE SIZE
080A	19.00	15.33	11.88	1.00	16.50	19.50	8.63	13.56	12.00	12.00 x 12.00	93	11.88 x 11.88
090A	19.00	15.33	11.88	1.00	16.50	19.50	8.63	13.56	12.00	12.00 x 12.00	96	11.88 x 11.88
100A	20.50	17.81	13.88	1.00	19.00	21.06	10.38	16.00	12.00	14.00 x 14.00	106	13.88 x 13.88
120A/120AHP	21.50	19.38	15.88	1.00	20.00	22.06	11.13	17.00	12.00	16.00 x 16.00	127	15.88 x 15.88
135A/135AHP	23.00	21.56	17.88	1.00	21.50	24.25	12.19	19.16	12.75	18.00 x 18.00	132	17.88 x 17.88
150A/150AHP	24.00	23.82	19.88	1.00	22.50	26.38	13.29	21.31	12.75	20.00 x 20.00	157	19.88 x 19.88
165A/165AHP	26.00	26.50	22.88	1.00	24.50	29.06	14.64	24.00	14.56	23.00 x 23.00	167	22.88 x 22.88
180A/180AHP	28.50	29.00	23.88	1.50	27.00	31.56	15.89	26.50	16.25	24.00 x 24.00	193	23.88 x 23.88
210A/210AHP	32.00	32.34	27.88	1.50	30.50	35.06	17.54	30.00	16.25	28.00 x 28.00	223	27.88 x 27.88
225A/225AHP	34.00	34.00	29.88	1.50	32.50	36.89	18.45	31.81	18.50	30.00 x 30.00	287	25.88 x 28.88
245A/245AHP	36.50	37.50	32.88	1.50	35.00	40.38	20.20	35.31	18.50	33.00 x 33.00	352	27.88 x 31.88
270A/270AHP	39.00	40.13	35.88	1.50	37.50	43.00	21.45	37.88	20.00	36.00 x 36.00	394	29.88 x 33.88
300A/300AHP	41.50	44.13	39.88	1.50	39.50	47.62	23.83	41.88	20.00	40.00 x 40.00	442	29.88 x 37.88
330A/330AHP	45.50	48.81	43.88	1.50	43.50	52.31	26.19	46.56	20.00	44.00 x 44.00	554	31.88 x 39.88
365A/365AHP	48.50	50.13	45.88	1.50	46.50	53.63	26.84	47.88	20.00	46.00 x 46.00	665	32.88 x 41.88
402A/402AHP	52.00	55.25	51.88	1.50	50.00	58.88	29.47	53.13	20.00	52.00 x 52.00	743	34.88 x 46.88

D-4205J

Notes:
1. All figures are in inches unless noted otherwise.
2. Average ship weight is for fan and motor assembly.
3. Dimensions are not to be used for construction.

TCF
TWIN CITY FAN

Model

DSI

Supply or exhaust fans shall be of the direct drive model DSI centrifugal square inline type, as manufactured by Twin City Fan, Minneapolis, Minnesota.

PERFORMANCE — Performance ratings shall conform to AMCA Standard 205 (fan efficiency grade), 211 (air performance) and 311 (sound performance). Fans shall be tested in accordance with ANSI/AMCA Standard 210 (air performance) and 300 (sound performance) in an AMCA accredited laboratory. Fans shall be licensed to bear the AMCA certified ratings seal for both sound and air, and fan efficiency grade (FEG). Model DSI shall be UL 705 listed.

CONSTRUCTION — Unit exterior shall be constructed of heavy gauge galvanized steel. The fan housing shall be square in shape and readily attachable to building ductwork. Unit side panels shall be removable for easy access for maintenance and service. The power assembly shall be removable as a complete module through the side access panel. Fan housings shall have universal mounting brackets to accommodate horizontal or vertical installations. Fans shall bear a permanently attached nameplate displaying model and serial number of the unit for future identification.

WHEEL — Fan wheels shall be of the non-overloading centrifugal backward inclined type, constructed of aluminum and containing a matching inlet venturi for optimum unit performance. Wheels shall be statically and dynamically balanced.

MOTOR — Motors shall be of the heavy-duty ball bearing type, closely matched to the fan load. A disconnect switch shall be factory installed and wired to the fan motor as standard. All motors shall be UL recognized.

ACCESSORIES — When specified, accessories such as backdraft damper, belt guard, motor cover, insulated housing, vibration isolators, side discharge, remote lubrication lines, inlet and outlet guards, special coatings, and filter box option shall be provided by Twin City Fan to maintain one source responsibility.

FACTORY RUN TEST — All fans prior to shipment shall be completely assembled and test run as a unit at operating speed or maximum RPM allowed for the particular construction type. Each wheel shall be statically and dynamically balanced in accordance with ANSI/AMCA 204-96 "Balance Quality and Vibration Levels for Fans" to Fan Application Category BV-3, Balance Quality Grade G6.3. Balance readings shall be taken by electronic type equipment in the axial, vertical, and horizontal directions. Records shall be maintained and a written copy shall be available upon request.

GUARANTEE — The manufacturer shall guarantee the workmanship and materials for its DSI Square Inline Fans for at least one (1) year from startup or eighteen (18) months from ship date, whichever occurs first.

TCF
TWIN CITY FAN

Model

BSI

Supply or exhaust fans shall be of the belt driven model BSI centrifugal square inline type, as manufactured by Twin City Fan, Minneapolis, Minnesota.

PERFORMANCE — Performance ratings shall conform to AMCA Standard 205 (fan efficiency grade), 211 (air performance) and 311 (sound performance). Fans shall be tested in accordance with ANSI/AMCA Standard 210 (air performance) and 300 (sound performance) in an AMCA accredited laboratory. Fans shall be licensed to bear the AMCA certified ratings seal for both sound and air, and fan efficiency grade (FEG). Model BSI shall be UL 705 listed. Fans shall bear a permanently attached nameplate displaying model and serial number of the unit for future identification.

CONSTRUCTION — Unit exterior shall be constructed of heavy gauge galvanized steel. The fan housing shall be square in shape and readily attachable to building ductwork. Unit side panels shall be removable for easy access for maintenance and service. The power assembly shall be removable as a complete module through the side access panel. Fan housings shall have universal mounting brackets to accommodate horizontal or vertical installations.

WHEEL — Fan wheels shall be of the non-overloading centrifugal backward inclined type, constructed of aluminum and containing a matching inlet venturi for optimum unit performance. Wheels shall be statically and dynamically balanced.

SHAFT — Fan shafts shall be precision ground and polished. Shafts shall have a first critical speed of at least 125% of the fan's maximum operating speed.

BEARINGS — Bearings shall be of the one-piece, pillow block type with relubricable zerk fittings. Bearings shall be designed for air handling service with a minimum L-10 life in excess of 100,000 hours; L-50 500,000 hours at the maximum cataloged operating speed. Bearing mounting plate shall have self-aligning tabs for exact locating and alignment of bearings.

DRIVE — Drives shall be sized for a minimum of 150% of driven horsepower. Machined, cast iron motor sheaves shall be adjustable for final system balancing. The belt and pillow block ball bearings shall be protected from the airstream by an enclosure.

MOTOR — Motors shall be of the heavy-duty ball bearing type, closely matched to the fan load. A disconnect switch shall be factory installed and wired to the fan motor as standard. Motor shall be mounted on the outside of the unit, isolated from the airstream. All motors shall be UL recognized.

ACCESSORIES — When specified, accessories such as backdraft damper, belt guard, motor cover, insulated housing, vibration isolators, side discharge, remote lubrication lines, inlet and outlet guards, special coatings, and filter box option shall be provided by Twin City Fan to maintain one source responsibility.

FACTORY RUN TEST — All fans prior to shipment shall be completely assembled and test run as a unit at operating speed or maximum RPM allowed for the particular construction type. Each wheel shall be statically and dynamically balanced in accordance with ANSI/AMCA 204-96 "Balance Quality and Vibration Levels for Fans" to Fan Application Category BV-3, Balance Quality Grade G6.3. Balance readings shall be taken by electronic type equipment in the axial, vertical, and horizontal directions on each of the bearings. Records shall be maintained and a written copy shall be available upon request.

GUARANTEE — The manufacturer shall guarantee the workmanship and materials for its BSI Square Inline Fans for at least one (1) year from startup or eighteen (18) months from ship date, whichever occurs first.

INDUSTRIAL PROCESS AND COMMERCIAL VENTILATION SYSTEMS

CENTRIFUGAL FANS | UTILITY SETS | PLENUM & PLUG FANS | INLINE CENTRIFUGAL FANS

MIXED FLOW FANS | TUBEAXIAL & VANEAXIAL FANS | PROPELLER WALL FANS | PROPELLER ROOF VENTILATORS

CENTRIFUGAL ROOF & WALL EXHAUSTERS | CEILING VENTILATORS | GRAVITY VENTILATORS | DUCT BLOWERS

RADIAL BLADED FANS | RADIAL TIP FANS | HIGH EFFICIENCY INDUSTRIAL FANS | PRESSURE BLOWERS

LABORATORY EXHAUST FANS | FILTERED SUPPLY FANS | MANCOOLERS | FIBERGLASS FANS | CUSTOM FANS

TCF
TWIN CITY FAN

TWIN CITY FAN & BLOWER

WWW.TCF.COM

5959 TRENTON LANE N | MINNEAPOLIS, MN 55442 | PHONE: 763-551-7600 | FAX: 763-551-7601

©2018 Twin City Fan Companies, Ltd., Minneapolis, MN. All rights reserved. Catalog illustrations cover the general appearance of Twin City Fan & Blower products at the time of publication and we reserve the right to make changes in design and construction at any time without notice.