SERIES 5A, 5B and 5C

VALVE STATUS MONITOR

Bray®

BRAY.COM

THE HIGH PERFORMANCE COMPANY

INTRODUCTION

The Bray Series 5A, 5B and 5C Valve Status Monitors (VSM) provide reliable visual and electrical position indication on any VDI/VDE 3845-compliant quarter-turn device. Series 5A offers lightweight, compact housing to fit the tightest spots. Series 5B features a larger body to accommodate up to 20 terminal points and six switches for increased customization. Our explosion-proof Series 5C provides unparalleled protection and reliability during service in the harshest environments. Our solutions enable end users to better monitor their process, no matter the conditions.

CERTIFICATIONS

- IP66/67/68
- NEMA Type 4X
- cULus
- UL50E Salt Spray
- ATEX
- IECEx
- CE

FEATURES

1 Enclosure

The compact low profile weatherproof VSM is UL certified NEMA Type 4, 4x and IP66/67. A die-cast aluminum cover and base coated with a polyester powder coat for exceptional corrosion, wear, impact and ultraviolet resistance.

2 High Visibility Position Indicator

Visual open and closed indication is provided with an impact resistant dome style indicator. Inverting the open and closed visual output is easily done by removing the dome and rotating it 90 degrees. There is no need to remove the cover and expose internal wiring of the VSM to change position indication.

3 Stub Shaft Secondary Seal

Ensures indicator area is separate from the VSM's internals. Provides a secondary seal to prevent water ingress should the dome or dome seal become compromised due to adverse site conditions.

4 Captive Cover Bolts

The cover is attached to the base by captive stainless steel bolts placed outside the sealing area.

5 Protective Washers

Clear, nonmetallic, corrosion resistant washers are used to ensure coating integrity when cover bolts are tightened.

6 O-Ring Seal For Watertight Enclosure

The O-ring seal between the cover and base provides a weatherproof seal preventing internal corrosion.

7 Sensor Cams

Splined cam design allows for easy and accurate setting of switch activation without the use of tools.

8 Limit Switches

Multiple switch options and configurations to meet connectivity requirements.

9 Terminals

Clearly marked terminal blocks are angled towards the user to ensure easy access.

10 Conduit Entries

Conduit entries available in either imperial or metric threads.

11 Grounding

Green color-coded, easy-access grounding bolt.

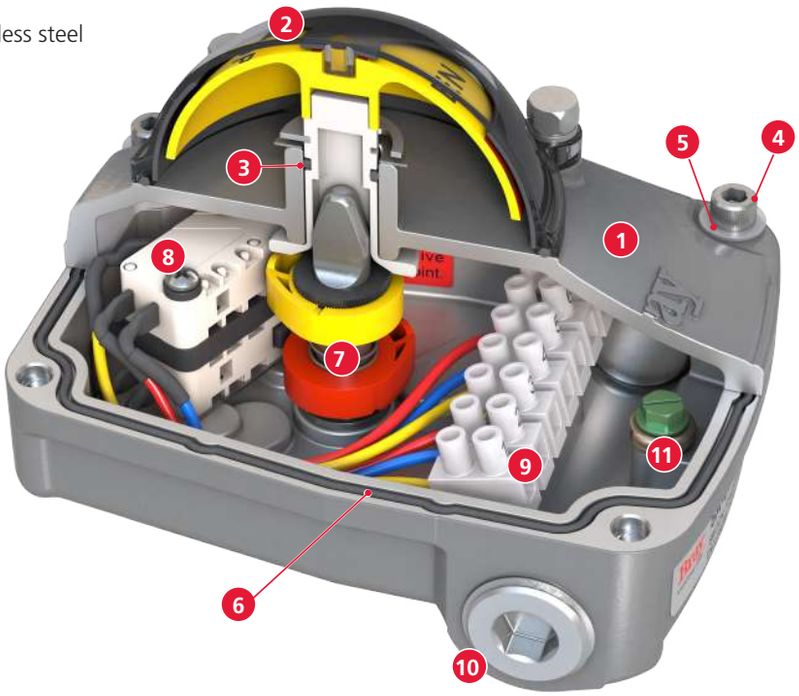

SERIES 5A

- **Weatherproof**
- **Low weight and compact**

Double Seal
Secondary seal allows for the unit to remain weather tight in the unlikely event of a dome failure.

Protective Washer
Prevents chipping or scratching of coating when removing/attaching bolts.

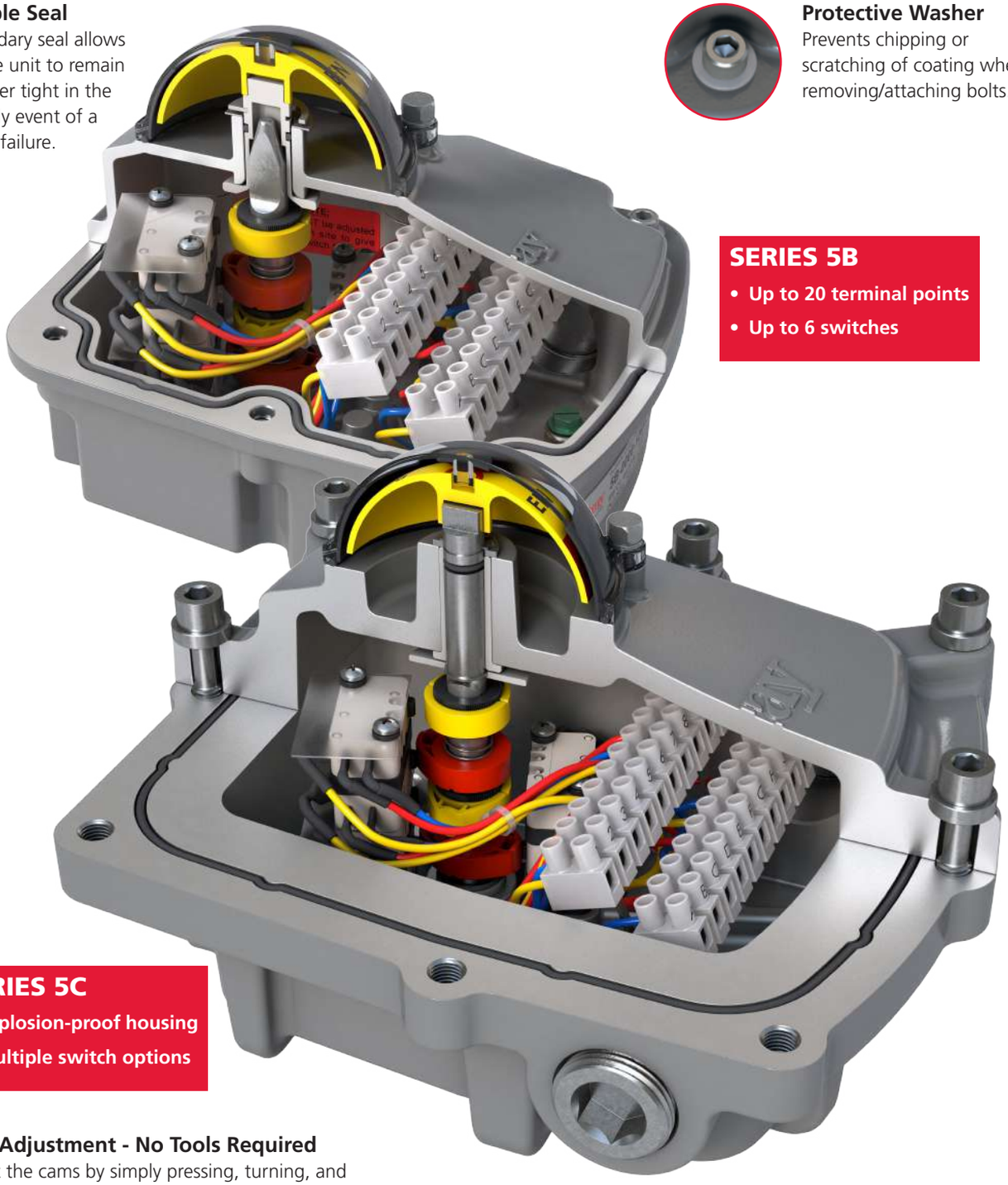

SERIES 5B
- Up to 20 terminal points
- Up to 6 switches

SERIES 5C
- Explosion-proof housing
- Multiple switch options

Cam Adjustment - No Tools Required
Adjust the cams by simply pressing, turning, and releasing at a new position. No tools required.

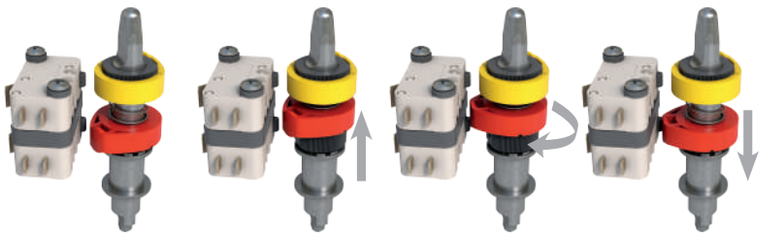

Easy Access Terminals
Angled up for easier field wiring.

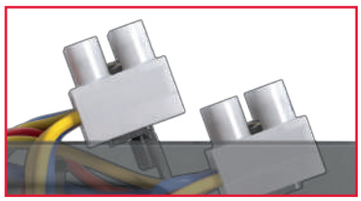

HAZARDOUS LOCATION PROTECTION

Hazardous locations, defined as any location where there is risk of explosion or fire, require the toughness and dependability of the Bray Series 5A/B/C Valve Status Monitors (VSMs). The atmosphere in a hazardous location may contain flammable concentrations of gases or vapors (Class I), or ignitable concentrations of dust (Class II) or fibers (Class III).

There are different models for classification depending on the market region. In North America, hazardous locations are broken down into Division 1 or Division 2 based on the probability of the presence of hazardous substance. In Europe, locations are broken down into three Zones, also based on the probability of risk. There is further classification for the dangerous substances as Groups.

Protection methods differ depending on the demands of the environment and customer application. The Bray Valve Status Monitors offer options for Intrinsically Safe protection, as well as Explosion-proof and dust protection.

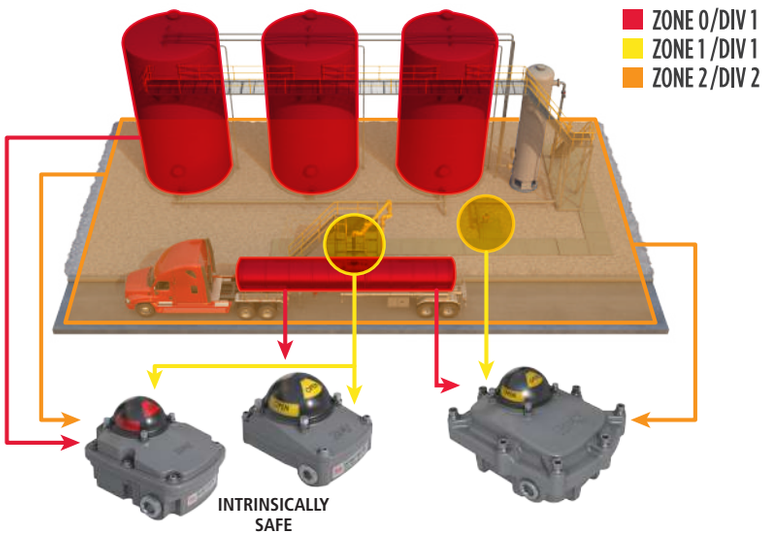

Area Classification		Criteria
Division1	Zone 0	Combustible substances are present continuously or for long periods of time.
	Zone 1	Combustible substances likely exist.
Division 2	Zone 2	Combustible substances are not likely to exist.

5A/5B: Intrinsically Safe

The Series Bray 5A and 5B Intrinsically Safe (Ex ia) valve status monitors are designed to limit the electrical and thermal energy to prevent ignition. The Series 5 A/B I.S. share the same customer features and benefits as our standard Valve Status Monitor. Industry-leading Pepperl+Fuchs NAMUR switches make the Series 5A and 5B VSMs a safe, reliable valve monitoring solution with unmatched adaptability.

NEC 500	Class I Division 1 Groups A, B, C, & D T6 Class II Division 1 Groups E, F, G T85°C
NEC 505	Class I, Zone 0, AEx ia IIC T6 Class I, Zone 1, AEx ia IIC T6
CEC	Ex ia IIC Gb T6
ATEX	II 1G Ex ia IIC Ga T6
IECEx	II 2G Ex ia IIC Gb T6

5C: Explosion-Proof

The Series 5C certified Flameproof (Ex d) and dust protection (Ex t) valve status monitor are designed to contain any explosions that may occur within the enclosure. The Series 5C valve status monitor shares much of its design with the Series 5A/5B VSM. The Series 5C design incorporates an additional rear conduit entry and explosion-proof housing for several switch options, offering exceptional safety, flexibility and durability. The Series 5C also features improved certificates including dust protection, a higher gas rating, and ATEX/ IECEx for more global applications.

NEC 500	Class I Division 1 Groups A, B, C & D T6
	Class I Division 1 Groups B, C & D T6 (cUL only)
	Class II Division 1 Groups E, F, G T85°C
ATEX	II 2 G Ex db IIB + H2 T6 Gb II 2 D Ex tb IIIC T85°C Db IP66/67/68
IECEx	

COMMUNICATION PROTOCOLS

Users can integrate the Series 5B and 5C VSMs into their communications network using industry-standard network protocols AS-i, DeviceNet™, and PROFIBUS DP. These protocols replace the chaotic web of cables used for a mixed signal control system with as little as a single network cable, reducing design complexity and cost. Most users can reduce their installation and commissioning cost by as much as 50% per automated valve package compared to conventional cabling systems.

To communicate on the network of choice, the S5B/C VSMs utilize a network interface card- the CommPro module. These interchangeable modules provide the powerful capabilities of network protocols with an easy-to-use interface. The CommPro modules clearly marked terminals allow for easy wiring and rapid commissioning, also available as a "plug & play" option with factory wired pin connectors. Discrete position control is achieved using two solenoid outputs for added convenience without additional cost. User features include:

- Module status LED and calibration button to test outputs and indicate faults.
- Network status LED for connection signal.
- VSM position LED to locally indicate open/close status.
- Local node address selection and display (available for DeviceNet™ and Profibus)

DeviceNet™

DeviceNet™ is an open, reliable network protocol for device-level control and communication between field instrumentation and higher-level devices. Originally developed by Allen-Bradley (Rockwell), DeviceNet conveniently interfaces into many DCS and PLC systems. It follows a trunk-line/drop-line topology for easy installation with multiple taps using a 4-wire cable that provides twisted pairs for signal and power. It can support up to 64 nodes on a single network, operate in a master-slave architecture, and supports both cyclic and explicit messaging.

AS-i

AS-Interface (AS-i) is the quintessential network solution for our discrete automated valves in the process industry. This open protocol provides unrivaled flexibility, particularly for retrofits, as it can interface with higher level fieldbus networks such as DeviceNet and Profibus. It is extremely simple and easy to install using a single pair of wires for both power and signal, making it one of the most cost-effective communication protocol options. The characteristic yellow cable for AS-i allows installation of a node at any location via piercing (insulation-displacement) technology. AS-i is ideal for real-time low data volumes, networking up to 62 units per master.

Profibus DP

Profibus DP (Distributed Peripherals) is a high-performance fieldbus standard for production automation applications. It is best suited for distributed I/O applications and allows large networks connecting up to 126 devices. Profibus uses a purple 4-wire cable, that provides twisted pairs for signal and power, where power in this case is used to bias the network lines at the termination points, not to power the nodes. This protocol network is capable of fast transmission rates (up to 12 Mbits/second); therefore, it is ideally suited for critical, time-sensitive functions.

FLEXIBLE MOUNTING OPTIONS

Users have the ability to mount the VSMs in both perpendicular and parallel orientations without changing brackets. The visual indication can also be inverted without removing the cover. This is done by rotating the indicator dome 90 degrees.

UNIVERSAL NAMUR MOUNTING BRACKET

Bray's VSMs can be mounted to most NAMUR compliant rack and pinion, scotch yoke and other quarter-turn actuators.

> Fixed Bracket

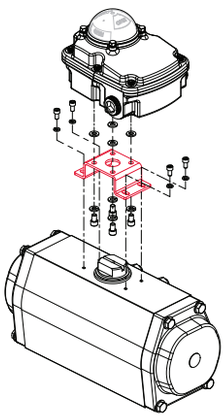

> Adjustable bracket for both 30x80 and 30x130 NAMUR mounting pads (fits all S92/93/98 actuators)

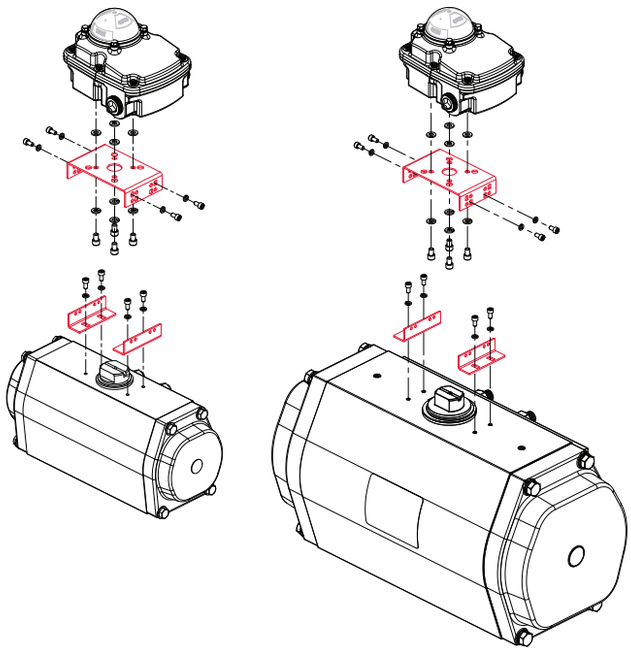

> Common mounting F05 pattern ISO5211

INDICATION SWITCH OPTIONS

Bray's VSM product line is offered with multiple indication switch options to better suit the end user's requirements.

		Series 5A Max Qty.	Series 5B Max Qty.	Series 5C Max Qty.
MECHANICAL SWITCHES	SPDT Mechanical Switch	2	6	6
	SPDT Mechanical Gold Plated Switch (Low Power)	2	6	6
	DPDT-DB Mechanical Switch	N/A	2	2
PROXIMITY SWITCHES	PNP N.O., 3-Wire Switch	2	6	6
	NPN N.O., 3-Wire Switch	2	6	6
	PNP N.C., 3-Wire Switch	2	6	6
	NPN N.C., 3-Wire Switch	2	6	N/A
	140V, 2-Wire Switch	2	6	6
	250V, 2-Wire Switch	2	6	N/A
	SPDT Reed Switch	2	6	N/A
	NAMUR Intrinsically Safe	2	6	N/A
COMMPRO	DeviceNet (with SPDT switches)	2	6	6
	AS-i (with SPDT switches)	2	6	6
	ProfiBus DP (with SPDT switches)	2	6	6

5X000X-126X X XXX

Housing Size

A	Type 4, 4X, IP66/67, Max 2 Switches
B	Type 4, 4X, IP66/67, Max 6 Switches
C	Ex d, Ex t, IP68 Max 6 Switches

Thread Type

0	Imperial
5	Metric

Switch Option

A	SPDT Mechanical Switch
B	SPDT Mechanical Gold Plated Switch (Low Power)
C	PNP N.O., 3-Wire Switch
D	NPN N.O., 3-Wire Switch
E	PNP N.C., 3-Wire Switch
F	140V, 2-Wire Switch
G	250V, 2-Wire Switch
H	NAMUR Intrinsically Safe Switch
K	SPDT Reed Switch
M	DeviceNet Module
N	AS-i Module
P	Profibus DP Module
R	NPN N.C., 3-Wire Switch
S	DPDT-DB Mechanical Switch

Switch Configuration

2	2 Switches
3	3 Switches, Independent
4	4 Switches, Independent
5	4 Switches (2 Independent, 2 Auxiliary)
6	6 Switches (4 Independent, 2 Auxiliary)

Body Material

536	Polyester-coated Die Cast Aluminum

BRAY FLOW CONTROL SOLUTIONS ARE AVAILABLE
FOR A VARIETY OF INDUSTRIES.

ENERGY
Mining
Oil & Gas
Power / FGD
Nuclear Power

WATER
Water / Wastewater
Ultra Pure Water
Desalination
Irrigation

INDUSTRIAL
Chemical
Pulp & Paper
Textile
Marine

INFRASTRUCTURE
Beverage & Food
Transportation
Heating, Ventilation & Air Conditioning (HVAC)

US HEADQUARTERS
BRAY INTERNATIONAL
13333 Westland East Blvd.
Houston, Texas 77041
Tel: +1.281.894.5454

CHINA HEADQUARTERS
Bray Controls (ZheJiang) Co. Limited
98 GaoXin # 6 Road
XiaoShan Economic & Development Zone
HangZhou, ZheJiang 311231, P.R. China
Tel: +86.571.8285.2200

EUROPE HEADQUARTERS
Bray Armaturen & Antriebe Europa
Europark Fichtenhain A 13b
D-47807 Krefeld
Germany
Tel: +49.2151.5336.0

INDIA HEADQUARTERS
Bray Controls India Pvt. Ltd.
Plot No. H-18 & H-19,
SIPCOT Industrial Park
Vallam Vadagal, Echoor Post,
Sriperumbudur Taluk
Kancheepuram District,
Tami Nadu - 631 604
Tel: +91.44.67170100

THE SMART CHOICE FOR FLOW CONTROL SINCE 1986.
WITH MORE THAN 300 LOCATIONS WORLDWIDE,
FIND A REPRESENTATIVE NEAR YOU AT **BRAY.COM**

All statements, technical information, and recommendations in this bulletin are for general use only. Consult Bray representatives or factory for the specific requirements and material selection for your intended application. The right to change or modify product design or product without prior notice is reserved. Patents issued and applied for worldwide.

Bray® is a registered trademark of Bray International, Inc.
© 2019 Bray International. All rights reserved.

B-1068_EL_S5A_B_C_2019-06